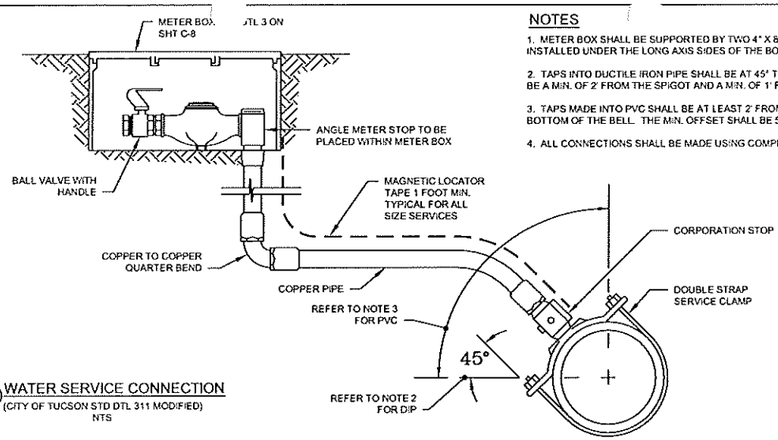

NOTES

1. METER BOX SHALL BE SUPPORTED BY TWO 4" X 8" X 16" SOLID CONCRETE BLOCKS INSTALLED UNDER THE LONG AXIS SIDES OF THE BOX.
2. TAPS INTO DUCTILE IRON PIPE SHALL BE AT 45° TO HORIZONTAL AS SHOWN. TAPS SHALL BE A MIN. OF 2' FROM THE SPIGOT AND A MIN. OF 1' FROM THE BELL.
3. TAPS MADE INTO PVC SHALL BE AT LEAST 2' FROM THE SPIGOT END AND 1' FROM THE BOTTOM OF THE BELL. THE MIN. OFFSET SHALL BE 5".
4. ALL CONNECTIONS SHALL BE MADE USING COMPRESSION FITTINGS.

1 WATER SERVICE CONNECTION
(CITY OF TUCSON STD DTL 311 MODIFIED)
NTS

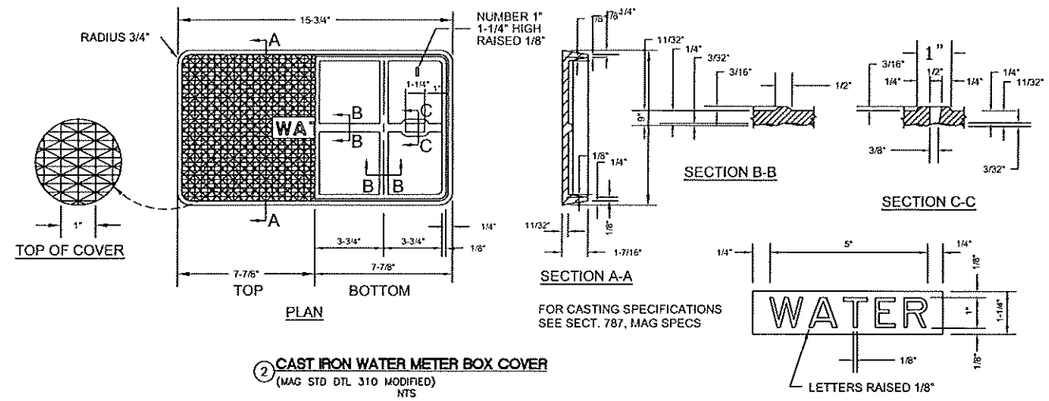

FOR CASTING SPECIFICATIONS SEE SECT. 787, MAG SPECS

2 CAST IRON WATER METER BOX COVER
(MAG STD DTL 310 MODIFIED)
NTS

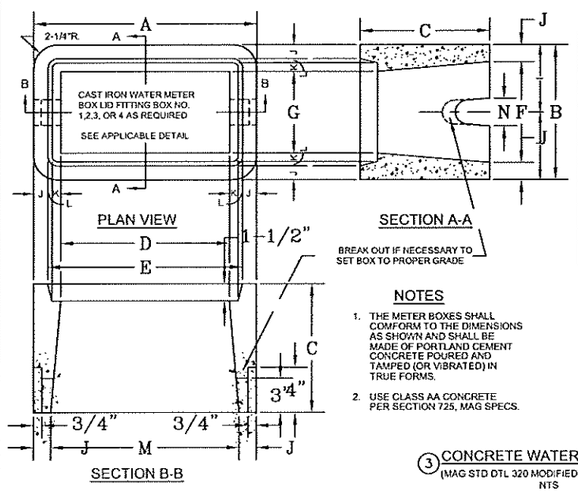

METER BOX DIMENSIONS				
DIM	BOX NUMBER			
	1	2	3	4
A	19"	24-1/2"	29-1/2"	33-1/2"
B	12"	16-3/4"	18-1/2"	22-3/4"
C	11"	12"	13"	12"
D	14"	19"	23-3/4"	27-3/4"
E	16"	22"	26-1/2"	30-1/2"
F	9"	13-1/4"	15"	19-3/4"
G	7"	11-1/4"	12-3/4"	17"
H	5"	14-1/4"	15-1/2"	19-3/4"
I	6"	8-3/8"	9-1/4"	11-3/8"
J	1-1/2"	1-3/4"	1-3/4"	1-1/2"
K	3/4"	1-1/8"	1"	1"
L	1/4"	3/8"	3/8"	3/8"
M	16"	21"	25-1/2"	30-1/2"
N	2-1/2"	3-1/2"	4"	4"
	5/8" OR 3/4" METER	1" METER	1-1/2" METER	2" METER

NOTES

1. THE METER BOXES SHALL COMFORM TO THE DIMENSIONS AS SHOWN AND SHALL BE MADE OF PORTLAND CEMENT CONCRETE POURED AND TAMPED (OR VIBRATED) IN TRUE FORMS.
2. USE CLASS AA CONCRETE PER SECTION 725, MAG SPECS.

3 CONCRETE WATER METER BOXES
(MAG STD DTL 320 MODIFIED)
NTS

NOTES

1. PRE-CAST, REINFORCED M.H. SECTIONS SHALL BE MANUFACTURED IN ACCORDANCE WITH A.S.T.M. C-478 EXCEPT AS MODIFIED BY STANDARD DETAILS BELOW.
2. M.H. STEPS SHALL BE INSTALLED AT SITE OF M.H. SECTION MANUFACTURE MINIMUM CLEARANCE EACH SIDE OF M.H. LEG SHALL BE 1" STEPS SHALL BE MOUNTED WITH 2 TO 1 SAND/CEMENT DRY PACK MORTAR
3. USE LOW ALKALI CEMENT ONLY.

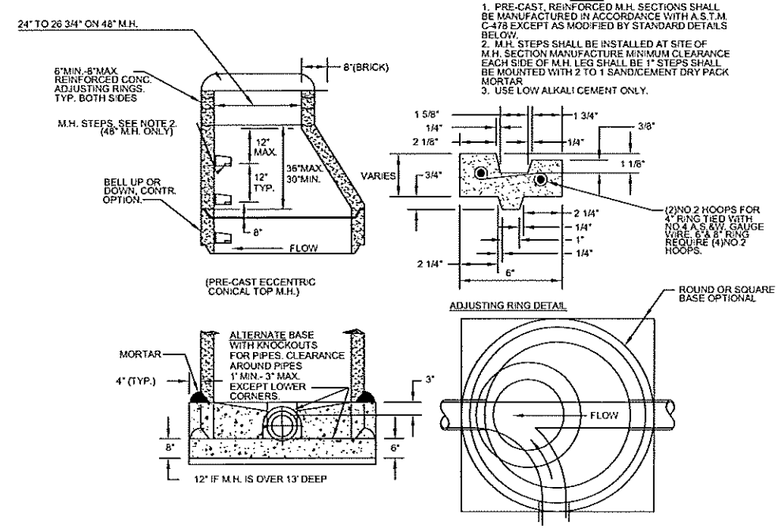

1 PRECAST CONCRETE SEWER MANHOLE
(MAG STD DTL 420 MODIFIED)
NTS

VERIFY SCALE!
THESE PRINTS MAY BE REDUCED. LINE BELOW MEASURES ONE INCH ON ORIGINAL DRAWING
MODIFY SCALE ACCORDINGLY!

REVISIONS			
NO.	DESCRIPTION	DATE	BY

P:\8104\8104.024 (DEMA Mod Trailer)\ACAD\Civil\Florence UTES site plan.dwg Plotted by david henry on Oct/17/2008

MORRISON MAIERLE, INC.
An Employee-Owned Company
Engineers Surveyors Scientists Planners
80 E. Rio Salado Parkway, Suite 201
Tempe, AZ 85281
Phone: (480) 517-5800
Fax: (480) 517-5801

COPYRIGHT © MORRISON MAIERLE, INC. 2006

DRAWN BY: DMH
CHK'D. BY: JG
APPR. BY:
DATE: 10/2008
Q.A. REVIEW
BY: JS
DATE:

FLORENCE — FLORENCE UTES MODULAR BUILDING — AZ

DETAILS

PROJECT NUMBER 8104.024
SHEET NUMBER 2 OF 2
DRAWING NUMBER DTL