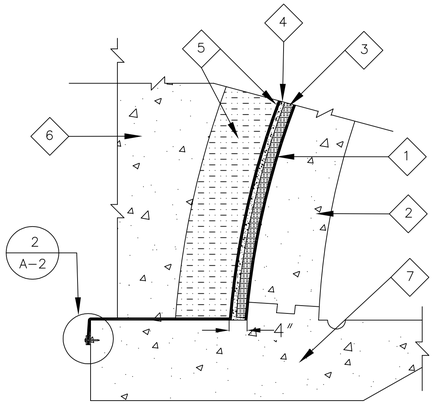

1 WATERPROOFING DETAIL

Scale: 3/4" = 1'-0"

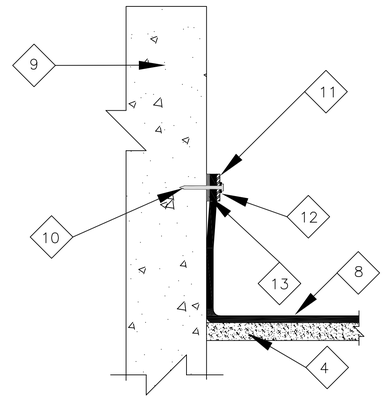

2 BATTEN DETAIL (TYPICAL)

Scale: 3" = 1'-0"

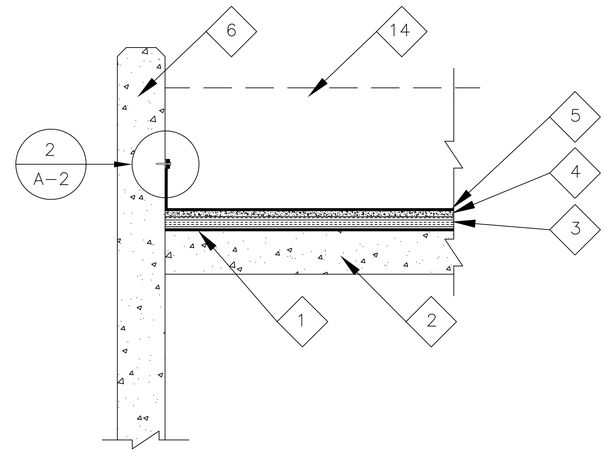

3 SECTION THRU HEADWALL

Scale: 1" = 1'-0"

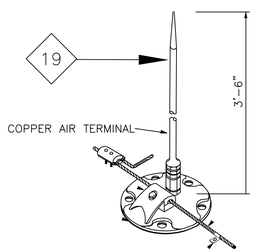

4 CENTER (HEADWALL) AIR TERMINAL DETAIL

Scale: 1" = 1'-0"

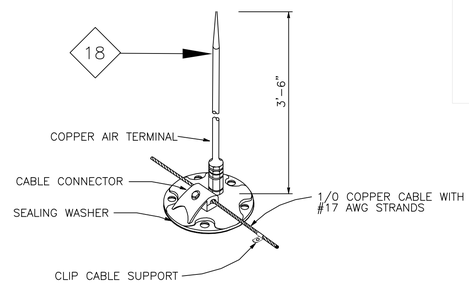

5 AIR TERMINAL DETAIL

Scale: 1" = 1'-0"

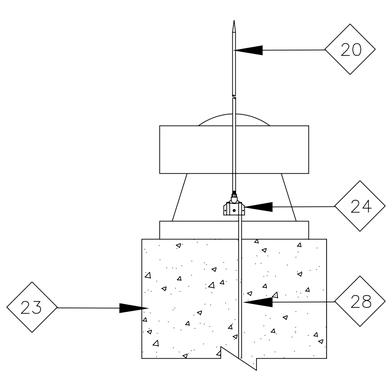

6 VENT STACK AIR TERMINAL DETAIL

Scale: 1" = 1'-0"

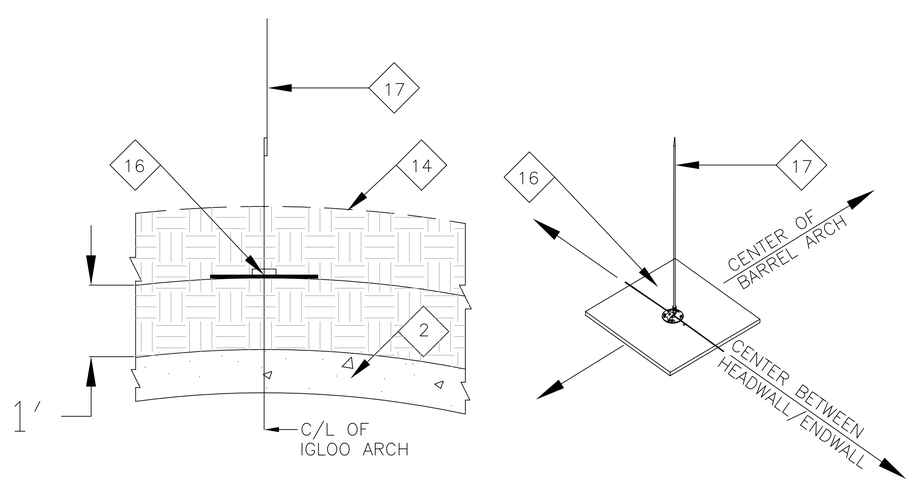

7 AIR TERMINAL SUPPORT PLATE

Scale: 1"=1'-0"

DESCRIPTIVE NOTES

1. EXISTING WATERPROOF MEMBRANE TO REMAIN.
2. EXISTING IGLOO STRUCTURE.
3. EXISTING INSULATION BOARD TO REMAIN.
4. EXISTING 1" THICK SHOTCRETE W/ FIBERMESH. LOCATED BETWEEN INSULATION BOARD AND NEW PVC GEOMEMBRANE TO BE REMOVED BY OTHERS.
5. NEW PVC GEOMEMBRANE. SHOWN 12 INCHES UP HEADWALL.
6. EXISTING IGLOO HEADWALL.
7. EXISTING CONCRETE FOOTING.
8. NEW PVC GEOMEMBRANE.
9. CONCRETE HEADWALL.
10. FASTENER. INDUSTRY STANDARD FOR THIS TYPE OF INSTALLATION.
11. 1/8" X 2" ALUMINUM BATTEN.
12. WASHER. INDUSTRY STANDARD FOR THIS TYPE OF INSTALLATION.
13. 1/8" X 2" BUTYL TAPE CAULK.
14. 24" EARTH COVER (TYPICAL)
16. 16"X16"X1/2" GALVANIZED PLATE FOR NEW AIR TERMINAL. SEE DETAIL 7/A-2.
17. NEW CENTER AIR TERMINAL. SEE DETAIL 5/A-2.
18. AIR TERMINALS. SEE DETAIL 5/A-2.
19. AIR TERMINAL CENTER OF HEADWALL. SEE DETAIL 4/A-2.
20. VENTILATOR STACK AIR TERMINAL. SEE DETAIL 6/A-2.
23. EXISTING CONCRETE VENTILATOR STACK.
24. AIR TERMINAL BASE.
28. 1/0 COPPER CABLE WITH #17 AWG STRANDS.

REVISION:
REVISION:
REVISION:
REVISION:
REVISION:

IGLOO WATERPROOFING
H-102, H-115, H-150, H-151, H-153, H-165, H-213
C-425, G-102, G-107 AND G-112
CAMP NAVAJO, BELLEMONT, ARIZONA

DESIGNER:
RICK VANDEWATER
CHECKED:

SHEET NO.
A2