THIS DRAWING & THE DATA CONTAINED HEREIN ARE THE PROPERTY OF HUNT & CARAWAY ARCHITECTS, LTD. AND MAY NOT BE USED, REPRODUCED, COPIED, OR TRANSFERRED WITHOUT THE WRITTEN CONSENT OF THE PROPRIETOR, AND/OR COMPANY REPRESENTATIVE, NOR SHALL ANY DATA, OR INFORMATION CONTAINED HEREIN BE USED IN PART, OR IN FULL, FOR ANY PURPOSE OTHER THAN THAT DESCRIBED WITHIN THESE DOCUMENTS.

Arizona Army National Guard
Silverbell Fire Station No. 361

FOR:

AZ Department of Emergency and Military Affairs

JOB # 06-002

ABBREVIATIONS

@	AT	F.E.	FIRE EXTINGUISHER	PA	PAINT
&	AND	F.E.C.	FIRE EXTINGUISH. CABINET	PF.	PREFINISHED
A.B.	ANCHOR BOLT	F.O.B.	FACE OF BRICK	P.L.	PLASTIC LAMINATED
A.C.	ACOUSTICAL TILE	F.O.C.	FACE OF CONCRETE	PLT.	PLATE
A/C	AIR CONDITIONING	F.O.CMU	FACE OF CMU	PREH.	PREHUNG
ACOUST	ACOUSTICAL	F.O.M.	FACE OF MASONRY	P.T.	PRESSURE TREATED
ADJ.	ADJUSTABLE	F.D.	FLOOR DRAIN	P.T.D.	PAPER TOWEL DISPENSER
A.F.F.	ABOVE FINISH FLOOR	F.F.	FAR FACE	PWD	PLYWOOD
AL.	ALUMINUM	F.F.	FINISH FLOOR		
ALUM.	ALUMINUM	F.G.	FINISH GRADE	Q.T.	QUARRY TILE
APPROX.	APPROXIMATE	FIN.	FINISH		
AUTO.	AUTOMATIC	FLR.	FLOOR	R.	RISER
		FR.	FRAME	R.L.	RAIN LEADER
B.F.A.	BARRIER FREE ACCESSIBLE	F.O.S.	FACE OF STUD	R.B.	RESILIENT BASE
B.F.	BARRIER FREE	F/R	FIRE RESISTANT	REF.	REFERENCE
BLK.	BLOCK	F.V.	FIELD VERIFY	REFL.	REFLECTED
BM.	BEAM			RESIST.	RESISTANT
BOT.	BOTTOM	GA.	GAUGE	R.D.	ROOF DRAIN
		G.I.	GALVANIZED IRON	RM.	ROOM
CA.	CARPET	GL.	GLASS	R.S.	RELIEF SCUPPER
CAB.	CABINET	G.R.	GUEST ROOM	R/W	RIGHT OF WAY
CER.	CERAMIC	GPDW	GYPSUM DRYWALL		
C.J.	CONSTRUCTION JOINT			S.B.	SUPPORT BARS
CL.	CENTERLINE	H.B.	HOSE BIB	S.C.	SOLID CORE
CLG.	CEILING	H.C.	HOLLOW CORE	S.C.W.D.	SOLID CORE WOOD DOOR
CLR.	CLEAR	HD.	HEAD	S.D.	SOAP DISPENSER
C.M.U.	CONCRETE MASONRY UNIT	H.D.	HUB DRAIN	SHT.	SHEET
C.O.	CLEAN OUT	HDWR.	HARDWARE	SIM.	SIMILAR
CO.	CONCRETE	H.M.	HOLLOW METAL	SPEC.	SPECIFICATION
COL.	COLUMN	H.	HORIZONTAL	SPKLR.	SPRINKLER
CONC.	CONCRETE	HT.	HEIGHT	SPL.	SPLASH
CONT.	CONTINUOUS			SQ.	SQUARE
C.T.	CERAMIC TILE	I.D.	IDENTIFICATION	S.S.	SERVICE SINK
C.H.	COAT HOOK	I.F.	INSIDE FACE	SS	STAINLESS STEEL
C.F./C.I.	CONTR. FURN./CONT. INST.	INSUL.	INSULATION	ST.	STAIN
C.F./O.I.	CONT. FURN/OWNER INST.	INT.	INTERIOR	STL.	STEEL
				STOR.	STORAGE
		JAN.	JANITOR	SUSP.	SUSPENDED
DBL.	DOUBLE	JT.	JOINT	SP.	STANDPIPE
DET.	DETAIL				
DFA.	DRINKING FOUNTAIN-ACCESS.	LAM.	LAMINATED	TEL.	TELEPHONE
DF.	DRINKING FOUNTAIN	LAUND.	LAUNDRY	T.C.	TEXTURED COATING
DIAG.	DIAGONAL	LAV	LAVATORY	TEXT	TEXTURE
DIA.	DIAMETER	LOUV.	LOUVER	THR.	THRESHOLD
DIM.	DIMENSION	LT.	LIGHT	T.	TOP
D/R.	DINING ROOM			TIN.	TINTED
DISP	DISPENSER	MACH.	MACHINE	T.O.CONC.	TOP OF CONCRETE
DN.	DOWN	MAINT.	MAINTENANCE	T.O.P.	TOP OF PAVING
DRAP.	DRAPERY	MAX.	MAXIMUM	T.O.W.	TOP OF WALL
DR.	DOOR	MECH.	MECHANICAL	T.P.	TOILET PAPER
DRESS.	DRESSING	MIN.	MINIMUM	TR.	TREAD
DRK.	DARK	MISC.	MISCELLANEOUS	TYP.	TYPICAL
DR.	DRYER	M.R.	MOISTURE RESISTANT		
DWG.	DRAWING			U.F.	UPHOLSTERY FABRIC
		M.T.	METAL THRESHOLD	U.N.O.	UNLESS NOTED OTHERWISE
		MT.	METAL		
E.A.	EACH	MTD.	MOUNTED	V.	VERTICAL
E.B.	EXPANSION BOLT	MTL.	METAL	V.T.	VINYL TILE
E.F.	EACH FACE	M.S.	MOP SINK	VEST	VESTIBULE
E.I.F.S.	EXTERIOR INSULATION FINISH SYSTEM	N.F.	NEAR FACE	V.W.C.	VINYL WALL COVERING
		N.C.	NON COMBUSTIBLE		
E.J.	EXPANSION JOINT	N.I.C.	NOT IN CONTRACT	W.	WIDTH
ELEV'N	ELEVATION	NO. S.	NUMBER SCALE	W/	WITH
ELEV.	ELEVATOR	N.T.S.	NOT TO SCALE	W.C.	WATER CLOSET
EQ.	EQUAL			WC.	WALL COVERING
EQUIP.	EQUIPMENT	O.C.	ON CENTER	WO.	WOOD
ESP.	ELECTROSTATIC PAINT	O.F.	OUTSIDE FACE	W.H.	WALL HYDRANT
E.W.	EACH WAY	O.F./C.I.	OWNER FURNISHED/ CONTRACTOR INSTALLED	W.I.	WROUGHT IRON
EXIST.	EXISTING			W.M.	WASHING MACHINE
EXP.	EXPOSED	O.F./O.I.	OWNER FURNISHED/ OWNER INSTALLED	W.R.	WATER RESISTANT
EXT.	EXTERIOR			W.W.F.	WELDED WIRE FABRIC

DRAWING INDEX

COVER SHEET
A0.1 Life Safety Floor Plan

CIVIL
C-1 Grading & Improvement Plan
C-2 Grading and Improvement Plan

ARCHITECTURAL
AD1.0 Demolition Site Plan
A1.0 Site Plan
A1.1 Site Details
A1.2 Site Details
A2.0 Floor Plan
A2.1 Dimension Floor Plan
A3.0 Reflected Ceiling Plan
A3.1 Ceiling Details
A4.0 Roof Plan
A4.1 Roof Details
A4.2 Metal Canopy Alt. Bid #4 & Details
A5.0 Exterior Elevations
A6.0 Building Sections
A6.1 Building Sections & Details
A6.2 Building Sections
A6.3 Wall Sections & Details
A6.4 Sections Details
A7.0 Enlarged Plans & Interior Elevations
A7.1 Interior Elevations
A8.0 Room Finish Schedule & Door Schedule
A8.1 Door & Window Details
A9.0 ADA Details

STRUCTURAL
S1-1.0 Structural Notes
S1-1.1 Structural Notes
S1-1.2 Typical Details
S1-1.3 Typical Details
S1-1.4 Typical Details
S2-1.0 Foundation Plan
S2-1.1 Add Alternates
S3-1.0 Roof Framing Plan
S4-1.0 Foundation Details
S4-1.1 Foundation Details
S5-1.0 Framing Details
S5-1.1 Framing Details

DRAWING INDEX

MECHANICAL
M2.1 Mechanical Floor Plan
M3.1 Mechanical Details
M4.1 Mechanical Schedules

PLUMBING
P2.1 Plumbing Floor Plan
P3.1 Plumbing Diagrams
P4.1 Plumbing Schedules

ELECTRICAL
E1.1 Site Plan
E2.1 Electrical Lighting Plan
E3.1 Electrical Power Plan
E4.1 Electrical HVAC & Special System Plan
E5.1 One Line Diagram and Schedule

DEFFERED SUBMITTALS

1. Fire Alarm
2. Roof Trusses
3. Site Lighting Bases
4. Trench Drains

ALTERNATE BID LIST

1. Trash Enclosure's CMU wall and metal gate.
2. Convault 2000 gal. fuel tank CMU site wall.
3. 35'-0" Concrete pad for in front of Bay doors.
4. Metal Canopy.
5. Acoustical Sound Batt Insulation on walls facing the flight line.
6. (4) Electric heaters in Apparatus Bay.
7. R-38 vinyl faced batt insulation

REFERENCE SYMBOLS

TITLE 123	ROOM NUMBER
	WINDOW NUMBER
A	WINDOW NUMBER
A	WALL TYPE INDICATOR
1ST FLOOR	DATUM ELEVATION
1	COLUMN GRID
	NORTH ARROW
ELEVATION# SHOWN ON THIS SHEET	EXTERIOR ELEVATIONS
SHOWN ON THIS SHEET ELEVATION SHOWN	INTERIOR ELEVATIONS
DETAIL NUMBER SHOWN ON THIS SHEET	BUILDING SECTION
DETAIL NUMBER SHOWN ON THIS SHEET	WALL SECTION
DETAIL# SHOWN ON THIS SHEET	DETAIL REFERENCE
TITLE SCALE DETAIL# ON THIS SHEET	DRAWING TITLE

PROJECT TEAM

OWNER
AZ Dept. of Emergency & Military Affairs
4636 E McDowell Road M5330
Phoenix, Arizona, 85008
PH: (602)-267-2729 FX: (602)-267-2894
Contact: Mike Herod

ARCHITECT
Hunt & Caraway Architects Ltd.
7145 N. 57th Drive
Glendale, Arizona 85301
PH: (623)-934-4090 FX: (623)-934-4501
Contact: Tamara Caraway

CIVIL ENGINEERING
Grenier Structural Engineering, Inc.
4515 S. McClintock Drive, Suite 215
Tempe, Arizona 85282
PH: (480)-831-1170 FX: (480)-831-1136
Contact: Jesse Laurie

STRUCTURAL ENGINEERING
Grenier Structural Engineering, Inc.
4515 S. McClintock Drive, Suite 215
Tempe, Arizona 85282
PH: (480)-831-1170 FX: (480)-831-1136
Contact: John Grenier

MECHANICAL, PLUMBING
ELECTRICAL ENGINEERING
Sullivan Designs, Inc.
7878 N. 16th. Street, Suite #270
Phoenix, Arizona 85020
PH: (602)-943-8424 FX: (602)-943-7931
Contact: Jim Maroney, Mike Tibben
Shay Alber

VICINITY MAP

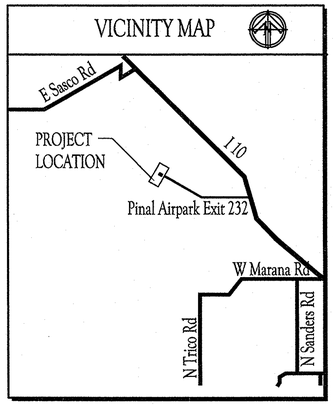

HUNT & CARAWAY
Architects, ltd.

7145 North 57th Drive
Glendale, Arizona 85301
Voice (623) 934-4090 Fax (623) 934-4501

REGISTERED ARCHITECT CERTIFICATE NO. 22538 TAMARA D. CARAWAY Expires 12-31-07 ARIZONA, U.S.A.

Revisions:

PROJECT:
Arizona Army National Guard
Silverbell Fire Station No. 361
Marana, Arizona

Arizona Army National Guard
Silverbell Fire Station No. 361
Marana, Arizona
FOR:
AZ Department of Emergency and Military Affairs

THIS DRAWING & THE DATA CONTAINED HEREIN ARE THE PROPERTY OF HUNT & CARAWAY ARCHITECTS, LTD. AND MAY NOT BE USED, REPRODUCED, COPIED, OR TRANSFERRED WITHOUT THE WRITTEN CONSENT OF THE PROPRIETOR AND/OR COMPANY REPRESENTATIVE. NOR SHALL ANY DATA OR INFORMATION CONTAINED HEREIN BE USED IN PART OR IN FULL FOR ANY PURPOSE OTHER THAN THAT DESCRIBED WITHIN THESE DOCUMENTS.

GRADING & IMPROVEMENT PLAN
FOR
ARIZONA ARMY NATIONAL GUARD
SILVERBELL FIRE STATION 361

HUNT & CARAWAY
Architects, ltd.
7145 North 57th Drive
Glendale, Arizona 85301
Voice (623) 934-0090 Fax (623) 934-5501

GENERAL NOTES

1. ALL CONSTRUCTION AND TEST METHODS SHALL BE IN CONFORMANCE WITH M.A.G. STANDARD SPECIFICATIONS FOR PUBLIC IMPROVEMENTS 1998 EDITION, EXCEPT AS NOTED OTHERWISE.
2. THE CONTRACTOR SHALL BE RESPONSIBLE FOR THE CARE, MAINTENANCE, REPAIR OR REPLACEMENT OF EXISTING IMPROVEMENTS IN THE WORK AREA WHICH HAVE BEEN REMOVED OR DAMAGED DURING THE COURSE OF CONSTRUCTION. ALL REPAIR REPLACEMENT, OR CLEANUP SHALL BE DONE TO THE SATISFACTION OF THE OWNER.
3. OMISSIONS OR CONFLICTS BETWEEN VARIOUS ELEMENTS OF THE DRAWINGS, NOTES AND DETAILS SHALL BE BROUGHT TO THE ATTENTION OF THE ENGINEER AND RESOLVED BEFORE PROCEEDING WITH THE WORK.
4. A COPY OF THIS PLAN SHALL BE KEPT IN AN EASILY ACCESSIBLE LOCATION ON THE SITE AT ALL TIMES DURING CONSTRUCTION.
5. UPON COMMENCEMENT OF WORK, TRAFFIC CONTROL DEVICES SHALL BE POSTED AND MAINTAINED BY THE CONTRACTOR UNTIL SUCH TIME AS THE WORK IS COMPLETED. ALL WARNING SIGNS, BARRICADES, ETC. SHALL BE IN ACCORDANCE WITH THE MANUAL OF UNIFORM TRAFFIC CONTROL DEVICES ADOPTED BY THE STATE OF ARIZONA PURSUANT TO A.R.S. 28-650. BARRICADE PLAN MUST BE SUBMITTED TO DEMA PROJECT MANAGER FOR APPROVAL 48 HOURS IN ADVANCE OF ANY WORK IN THE RIGHT-OF-WAY.
6. THE CONTRACTOR SHALL OBTAIN PERMITS INCLUDING THOSE FOR GRADING AND AIR POLLUTION, REQUIRED BY GOVERNMENTAL AGENCIES, NO WORK AS DELINEATED ON THESE PLANS, SHALL BE STARTED UNTIL THE CONTRACTOR HAS OBTAINED THE NECESSARY PERMITS.
7. THE CONTRACTOR SHALL LOCATE ALL STRUCTURES, UNDERGROUND PIPELINES, ELECTRICAL AND TELEPHONE CONDUITS, WHETHER SHOWN OR NOT SHOWN ON THE PLANS PRIOR TO CONSTRUCTION, AND SHALL OBSERVE ALL POSSIBLE PRECAUTIONS TO AVOID ANY DAMAGE TO THESE FACILITIES.
8. THE CONTRACTOR SHALL VERIFY ALL QUANTITIES, INCLUDING EXCAVATION, BORROW EMBANKMENT, SHRINK OR SWELL, GROUND COMPACTION, HAUL, AND ANY OTHER ITEMS AFFECTING THE BID TO COMPLETE THE GRADING TO THE ELEVATIONS SHOWN ON THESE PLANS AND TO BASE THE BID SOLELY UPON HIS OWN CALCULATED QUANTITIES. IT SHALL BE THE CONTRACTORS RESPONSIBILITY TO NOTIFY THE ENGINEER PRIOR TO CONSTRUCTION OF ANY MAJOR DISCREPANCIES BETWEEN HIS ESTIMATED QUANTITIES AND THOSE SHOWN ON THE PLANS.
9. ALL WORK AND MATERIALS WHICH DO NOT CONFORM TO THESE PLANS ARE SUBJECT TO REMOVAL AND REPLACEMENT AT THE CONTRACTOR'S EXPENSE.
10. THE CONTRACTOR SHALL FURNISH ALL MATERIALS, LABOR AND EQUIPMENT TO CONSTRUCT/INSTALL THE IMPROVEMENTS SHOWN ON THESE PLANS UNLESS SPECIFICALLY NOTED OTHERWISE.
11. THE CONTRACTOR SHALL CALL BLUE STAKE (1-800-782-5348) TO VERIFY LOCATION OF ALL UTILITIES AT LEAST 2 (TWO) WORKING DAYS PRIOR TO COMMENCEMENT OF CONSTRUCTION.
12. THE CONTRACTOR SHALL COMPLY WITH ALL APPLICABLE OCCUPATIONAL SAFETY AND HEALTH ADMINISTRATION REGULATIONS.

GENERAL UTILITY NOTES

EXISTING UTILITY LOCATIONS, AS SHOWN ON THE PLANS, WERE INFERRED FROM ABOVE GROUND FEATURES. HOWEVER, UTILITY LOCATIONS ARE NOT TO BE CONSIDERED EXACT OR COMPLETE. PRIOR TO COMMENCING WORK, THE CONTRACTOR SHALL VERIFY THE LOCATION AND DEPTH OF ALL UTILITIES WITH THE APPROPRIATE ORGANIZATION AND, IF NECESSARY, POTHOLE ANY AND ALL UTILITY LOCATIONS IN QUESTION. THE CONTRACTOR SHALL PROTECT ALL EXISTING UTILITIES "IN-PLACE" UNLESS OTHERWISE NOTED ON THE CONSTRUCTION DOCUMENTS.

GENERAL GRADING NOTES

1. IT IS THE RESPONSIBILITY OF THE CONTRACTOR TO CALCULATE HIS OWN EARTHWORK QUANTITIES AND SUBMIT HIS BID BASED THEREON.
2. THE CONTRACTOR SHALL GIVE FORTY-EIGHT (48) HOURS NOTICE WHEN HE SHALL REQUIRE THE SERVICES OF THE ENGINEER OR ANY OTHER PERSON PROPERLY AUTHORIZED FOR SUCH PURPOSE FOR LAYING OUT ANY PORTION OF THE WORK. HE SHALL ALSO DIG ALL STAKE HOLES NECESSARY TO GIVE LINE AND LEVELS AND SHALL PROVIDE ASSISTANCE CALLED FOR BY THE ENGINEER OR HIS ASSISTANTS UPON ANY PART OF THE WORK WHENEVER SO REQUIRED.
3. THE CONTRACTOR SHALL PRESERVE ALL STAKES SET FOR THE LINES, LEVELS OR MEASUREMENTS OF THE WORK IN THEIR PROPER PLACES UNTIL AUTHORIZED TO REMOVE THEM BY THE ENGINEER OR HIS DULY AUTHORIZED REPRESENTATIVE. ANY EXPENSE INCURRED IN REPLACING ANY STAKES WHICH THE CONTRACTOR OR HIS SUBORDINATES MAY HAVE FAILED TO PRESERVE SHALL BE CHARGED TO THE CONTRACTOR.
4. BUILDING SITES SHALL BE CONSTRUCTED TO WITHIN 0.10 FEET OF FINISHED BUILDING PAD ELEVATIONS AS STAKED BY THE SURVEYOR. STREETS SHALL BE CONSTRUCTED TO WITHIN 0.01 FEET OF FINISHED SUBGRADE ELEVATIONS AS STAKED BY THE SURVEYOR.
5. IT SHALL BE THE CONTRACTOR'S RESPONSIBILITY TO FURNISH, HAUL AND APPLY ALL WATER REQUIRED FOR COMPACTION AND FOR THE CONTROL OF DUST FROM CONSTRUCTION ACTIVITY. THE COST THEREOF IS TO BE INCLUDED IN HIS BID. NO SEPARATE PAYMENT WILL BE MADE FOR WATER.
6. ALL ORGANIC MATERIAL SHALL BE REMOVED WITHIN THE CLEARING LIMITS FOR NECESSARY GRADING PER THE RECOMMENDATIONS IN PROJECT'S GEOTECHNICAL REPORT AND LAWFULLY DISPOSED OF PRIOR TO GRADING.
7. EARTHWORK AND PAVING SHALL BE IN ACCORDANCE WITH THE GEOTECHNICAL REPORT PREPARED BY LMT ENGINEERING, INC. ON AUGUST 8, 2006, JOB NUMBER 26557. ALL SITE CLEARING, EARTHWORK, FOUNDATIONS, FLOOR SLAB CONSTRUCTION, ETC. SHALL CONFORM TO THE RECOMMENDATIONS CONTAINED IN SAID REPORT.
8. THE SOILS ENGINEER SHALL OBSERVE, INSPECT AND TEST ALL EARTHWORK OPERATIONS, INCLUDING BUT NOT LIMITED TO: CLEARING, SUBGRADE PREPARATION, STRUCTURAL AND TRENCH EXCAVATION AND BACKFILL, TOGETHER WITH PLACEMENT AND COMPACTION OF FILL.
9. ALL WORK SHALL CONFORM TO THE GRADING STANDARDS, AT THE TIME OF PLAN APPROVAL BY THE DEMA PROJECT MANAGER. THE CONTRACTOR SHALL HYDROSEED OR REVEGETATE ALL AREAS DISTURBED BY CONSTRUCTION OF THESE IMPROVEMENTS THAT ARE NOT COVERED BY PAVEMENT, STRUCTURES OR SLOPE/BANK PROTECTION.
10. IF UNANTICIPATED CONDITIONS ARE ENCOUNTERED DURING THE COURSE OF THE CONSTRUCTION AND ARE BEYOND THE SCOPE OF THE DESIGN, THE ENGINEER SHALL SUBMIT THE NECESSARY REVISED OR SUPPLEMENTAL IMPROVEMENT PLANS FOR REVIEW AND APPROVAL BY THE DEMA PROJECT MANAGER.
11. ALL CONCRETE SHALL BE CLASS B, 3000 PSI COMPRESSIVE STRENGTH AT 28 DAYS, UNLESS OTHERWISE SPECIFIED AND SHALL CONFORM TO THE REQUIREMENTS OF SECTION 340 AND 725, MAG UNIFORM STANDARD SPECIFICATIONS AND DETAILS FOR PUBLIC WORKS CONSTRUCTION.
12. THE BOUNDARY AND TOPOGRAPHIC INFORMATION SHOWN ON THESE IMPROVEMENT PLANS IS BASED UPON A BOUNDARY AND TOPOGRAPHIC SURVEY PERFORMED BY OLSSON ASSOCIATES. GEI SHALL NOT BE RESPONSIBLE FOR ERRORS THAT MAY ARISE IN THE SUPPLIED SURVEY DATA.

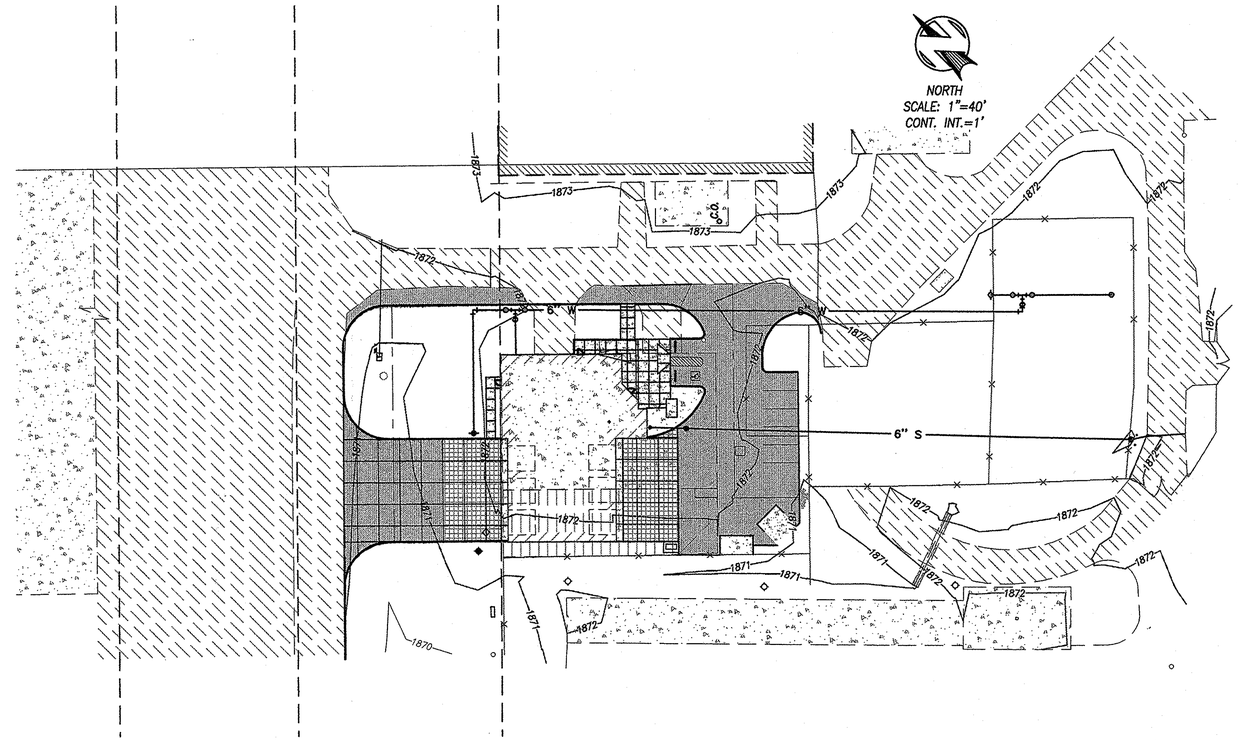

LEGEND

EXISTING		PROPOSED
—6"——W—	WATER	—6"——W—
—— 8" S ——	SEWER	—— 8" S ——
—— -G- ——	GAS LINE	—— -G- ——
—— OHE ——	OVERHEAD ELECTRIC	
	SIGNS	
	STREET LIGHTS	
	SURVEY MONUMENTS	
	SURVEY CONTROL POINTS	
MH	SEWER MANHOLE	MH
C.O.	SEWER CLEANOUT	C.O.
WV	WATER VALVE	WV
FH	FIRE HYDRANT	FH
WM	WATER METER	WM
GM	GAS METER	GM
	TRANSFORMER	
PP	POWER/UTILITY POLE	PP
T	TELEPHONE PEDISTAL	T
	KEY NOTES	A
50.00	SPOT ELEVATION	59.50
	FINISHED PAD ELEVATION	13.50
	PAVEMENT	
	CONCRETE PAVING	
	RIPRAP	
	DRAINAGE FLOW	

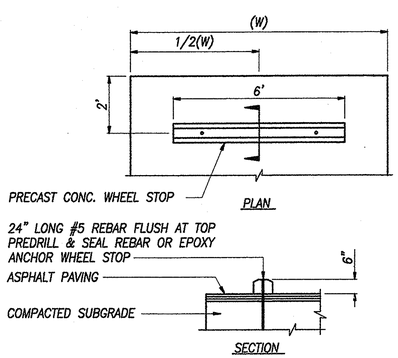

1 CONCRETE WHEEL STOP
SCALE: NONE

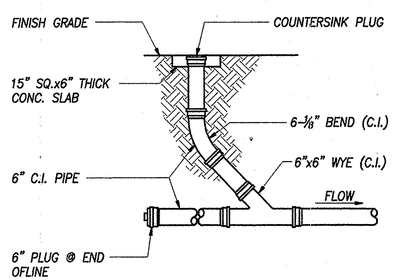

2 CLEANOUT DETAIL
SCALE: NONE

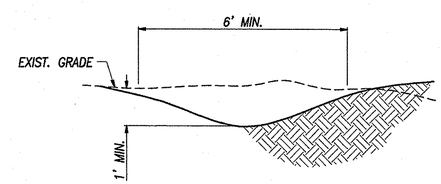

3 TYP. DRAINAGE SWALE
SCALE: NONE

ARIZONA ARMY
NATIONAL GUARD
SILVERBELL FIRE STATION 361
FOR
AZ DEPARTMENT OF EMERGENCY AND MILITARY AFFAIRS

GRENIER ENGINEERING, INC.
Structural & Civil Engineering Consultant
1660 North Alvernon Way, Tucson, Arizona 85712
Phone: 520.326.7082 – Fax: 520.326.7808

Revisions:

Drawn by:	J.A.B.
Checked by:	K.A.D.
Scale:	As Shown
Date:	08/15/06

Registered Professional Engineer (Civil) CERTIFICATE NO. 30497 KENT A. DELPH Date Signed 8/15/06 ARIZONA U.S.A.

JOB # 06002

SHEET
C1

THIS DRAWING & THE DATA CONTAINED HEREIN ARE THE PROPERTY OF HUNT & CARAWAY ARCHITECTS, LTD. AND MAY NOT BE USED, REPRODUCED, COPIED, OR TRANSFERRED WITHOUT THE WRITTEN CONSENT OF THE ARCHITECTS AND/OR COMPANY REPRESENTATIVES. WORK SHALL ANY DATA OR INFORMATION CONTAINED HEREIN BE USED IN WHOLE OR IN PART, OR IN FULL FOR ANY PURPOSE OTHER THAN THAT DESIGNED WITHIN THESE DOCUMENTS.

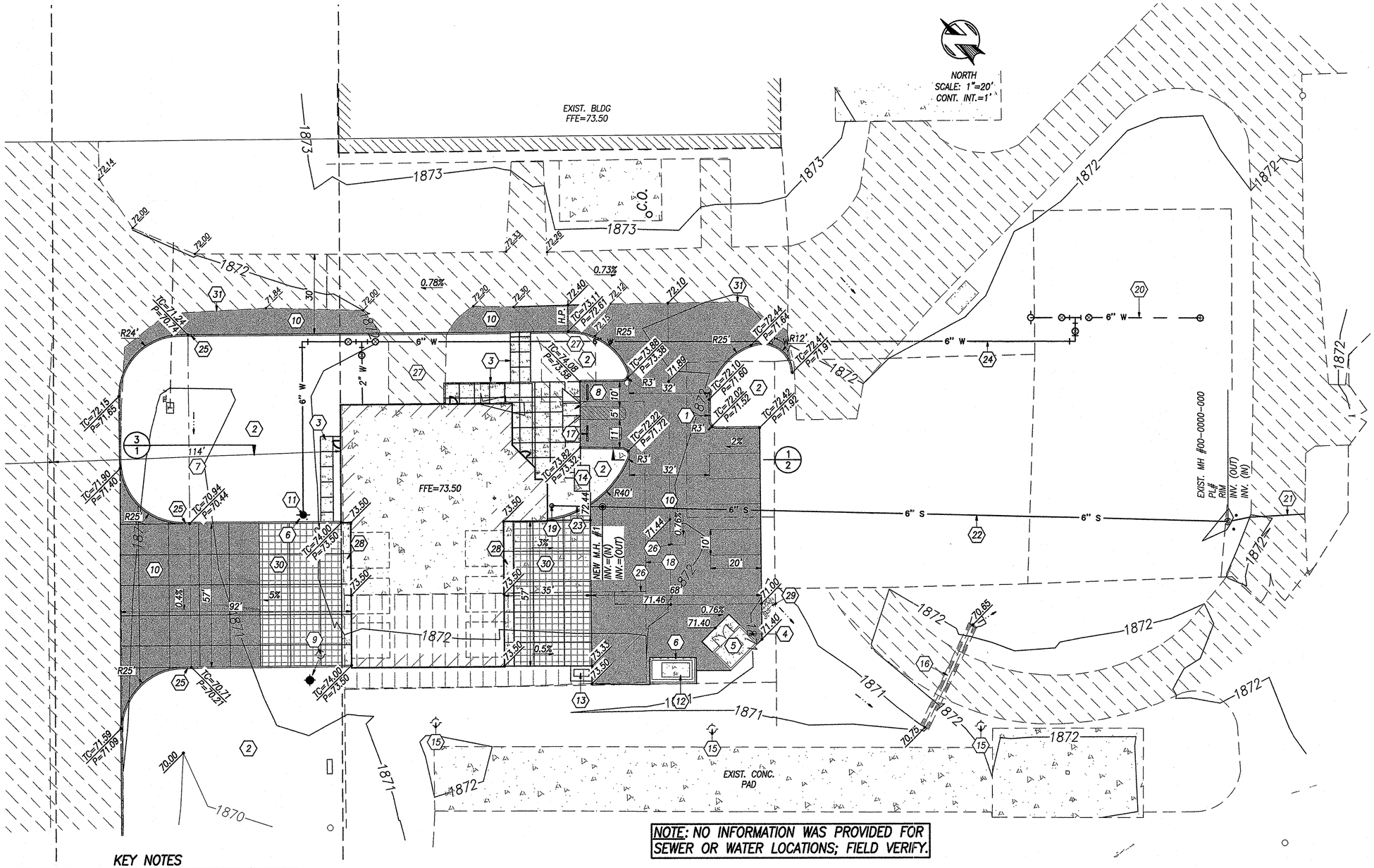

NOTE: NO INFORMATION WAS PROVIDED FOR SEWER OR WATER LOCATIONS; FIELD VERIFY.

KEY NOTES

1. NEW CONC. VERT. CURB PER M.A.G. STD. DTL. NO. 222, TYPE A
2. NEW LANDSCAPE AREA; LOW WATER USE PLANTS W/ DECOMPOSED GRANITE PER LANDSCAPE PLAN
3. NEW CONC. SIDEWALK PER M.A.G. STD. DTL. NO. 230
4. NEW 6' HIGH CMU WALL PER ARCHITECTURAL PLANS
5. NEW TRASH ENCLOSURE PER ARCHITECTURAL PLANS
6. NEW BOLLARDS PER ARCHITECTURAL PLANS
7. EXIST. FLIGHT LINE SETBACK
8. HANDICAP ACCESSIBLE RAMP PER M.A.G. STD. DTL. NO. 233, TYPE "C"
9. EXIST. STREETLIGHT TO BE RELOCATED
10. NEW ASPHALT PAVEMENT, 5" A.C., 4" A.B.C.
11. NEW FIRE HYDRANT
12. CONVAULT 2000 GAL. FUEL TANK PER ARCHITECTURAL PLANS
13. SAND & OIL INTERCEPTOR
14. FLAG POLES W/ LIGHT IN BASE PER ARCHITECTURAL PLANS
15. EXIST. STREETLIGHTS, TO REMAIN
16. EXIST. (2) CMP'S; TO REMAIN
17. NEW CONC. WHEEL STOP PER DTL. NO. 1, SHT. 1
18. EXIST. CONC. SLAB; TO BE REMOVED
19. NEW C.O., INV.=00.00 PER DTL. NO. 2, SHT. 1
20. EXIST. WATER LINE
21. EXIST. SEWER LINE
22. NEW 249 L.F. 6" SEWER LINE; FIELD VERIFY, MIN. 1% SLOPE
23. NEW 20 L.F. 6" SEWER LINE; FIELD VERIFY, MIN. 1% SLOPE
24. NEW 386 L.F. 6" WATER LINE
25. NEW 5' DEPRESSED CURB TO ALLOW FOR DRAINAGE
26. EXIST. GREASE TRAPS; TO BE REMOVED
27. EXIST. PAVEMENT; TO BE REMOVED
28. 8" P.C.C.P./4" A.B.C.
29. 12" THICK GROUTED RIPRAP; d50"=9"
30. ALTERNATE BID
31. MATCH EXIST. PVMT. PER M.A.G. STD. SPECS.

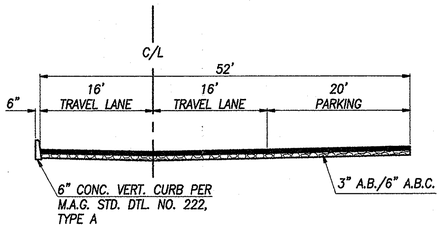

1 TYPICAL ROAD DETAIL

SCALE: NONE

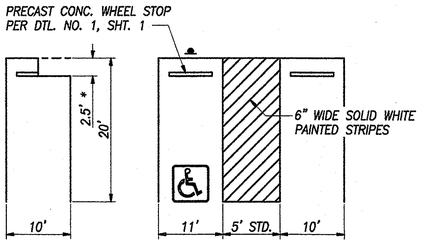

STANDARD

* OVERHANG FROM FACE OF CURB OR FACE OF WHEEL STOP

2 STD. PARKING DETAIL

SCALE: 1"=10'

HUNT & CARAWAY
Architects, ltd.
7145 North 57th Drive
Glendale, Arizona 85301
Voice (623) 934-4090 Fax (623) 934-4501

ARIZONA ARMY
NATIONAL GUARD
SILVERBELL FIRE STATION 361
FOR
AZ DEPARTMENT OF EMERGENCY AND
MILITARY AFFAIRS

GRENIER ENGINEERING, INC.
Structural & Civil Engineering Consultant
1660 North Alvernon Way, Tucson, Arizona 85712
Phone: 520.326.7082 ~ Fax: 520.326.7508

Revisions:

Drawn by:	J.A.B.
Checked by:	K.A.D.
Scale:	As Shown
Date:	08/15/06

Registered Professional Engineer (Civil) CERTIFICATE NO. 30497 KENT A. DELPH Date Signed 8/15/06 ARIZONA U.S.A.

JOB # 06-002

SHEET C-2

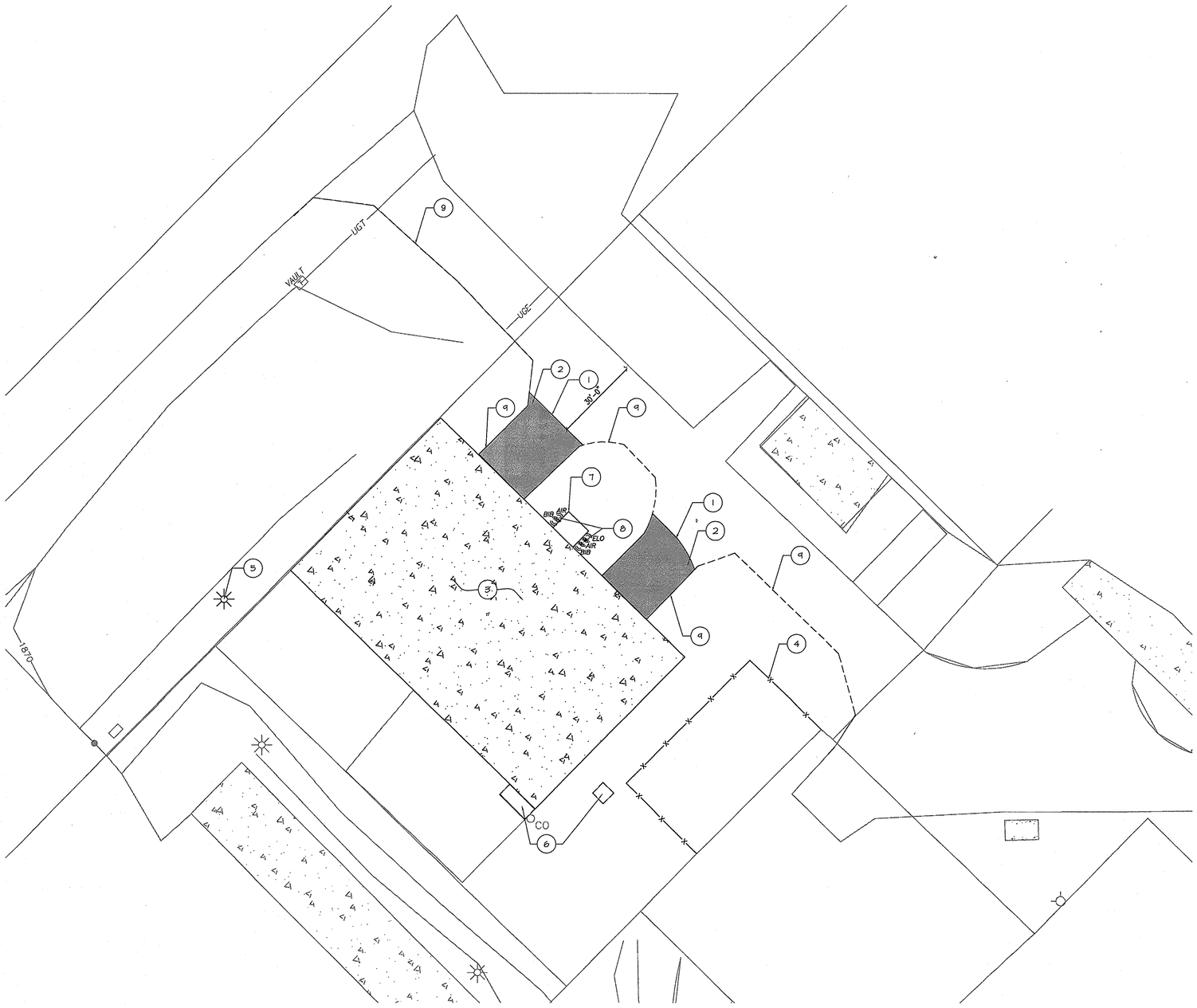

Demolition Site Plan

SCALE: 1" = 20'

LEGEND

EXISTING ASPHALT DRIVEWAY TO BE REMOVED

EXISTING CONCRETE PAVEMENT TO BE REMOVED

KEYNOTES:

1. CURB TO BE CUT TO RECEIVE NEW ASPHALT DRIVEWAY
2. EXISTING ASPHALT TO BE REMOVED AND DISPOSED BY CONTRACTOR
3. EXISTING CONCRETE PAD TO BE REMOVED AND DISPOSED BY CONTRACTOR
4. EXISTING FENCE TO BE REMOVED AND DISPOSED BY CONTRACTOR
5. EXISTING LIGHT POLE TO BE REMOVED AND RELOCATED
6. EXISTING GREASE TRAP TO BE REMOVED AND DISPOSED BY CONTRACTOR
7. EXISTING CONCRETE BASIN TO BE REMOVED AND DISPOSED BY CONTRACTOR
8. EXISTING AIR & ELO BIB TO BE REMOVED AND STUBBED BACK TO STREET
9. EXISTING CONCRETE CURB TO BE REMOVED AND DISPOSED BY CONTRACTOR

GENERAL NOTES:

1. ANY EXISTING AREAS TO REMAIN THAT ARE DAMAGED BY DEMOLITION OR CONSTRUCTION WORK SHALL BE PATCHED AND REPAIRED AS REQUIRED TO MATCH EXISTING ADJACENT AREA IN MATERIAL, FINISH AND COLOR UNLESS OTHERWISE NOTED.
2. CONTRACTOR SHALL ERECT ALL NECESSARY TEMPORARY BARRIERS TO PROTECT AREAS DURING DEMOLITION AND CONSTRUCTION.
3. CONTRACTOR TO VERIFY EXISTING FIELD CONDITIONS BEFORE COMPLETION OF BID AND START OF CONSTRUCTION. CONTRACTOR TO PROVIDE IN WRITING TO ARCHITECT OF RECORD; DATE, TIME, AND NOTES OF FIELD VERIFICATION BEFORE BID ACCEPTANCE AND START OF CONSTRUCTION. IF EXISTING CONDITIONS ARE NOT FIELD VERIFIED AND WRITTEN OBSERVATION IS NOT GIVEN TO THE ARCHITECT OF RECORD, THEN CONTRACTOR ACCEPTS THE PLANS TO BE CORRECT AND ANY DISCREPANCIES DUE TO FIELD CONDITIONS ARE TO BE HIS RESPONSIBILITY.
4. ANY SALVAGEABLE MATERIALS REMOVED DURING DEMOLITION ARE TO BE STORED OR DISPOSED OF AS DIRECTED BY OWNER.

HUNT & CARAWAY
Architects, ltd.

7145 North 57th Drive
Glendale, Arizona 85301
Voice (623) 934-4090 Fax (623) 934-4501

Arizona Army National Guard
Silverbell Fire Station No. 361
For
AZ Department of Emergency and Military Affairs

Demolition Site plan

Revisions:

Drawn by:	T.A.
Checked by:	J.S.
Scale:	As Shown
Date:	08/21/06

REGISTERED ARCHITECT
CERTIFICATE NO.
22538
TAMARA D. CARAWAY
Date Signed 8-21-06
ARIZONA, U.S.A.

JOB #
06-002

SHEET
AD1.0

THIS DRAWING & THE DATA CONTAINED HEREIN ARE THE PROPERTY OF HUNT & CARAWAY ARCHITECTS, LTD. AND MAY NOT BE USED, REPRODUCED, COPIED, OR TRANSFERRED WITHOUT THE WRITTEN CONSENT OF THE PROPRIETOR AND/OR COMPANY REPRESENTATIVE. NOR SHALL ANY DATA OR INFORMATION CONTAINED HEREIN BE USED IN PART OR IN FULL FOR ANY PURPOSE OTHER THAN THAT DESCRIBED WITHIN THESE DOCUMENTS.
\\Officeserver\Server\PROJECTS\2006\06-002-NATIONAL GUARD MARANA\NATIONAL GUARD MARANA\Sheets\AD1.0 Demolition Site plan.dwg

THIS DRAWING & THE DATA CONTAINED HEREIN ARE THE PROPERTY OF HUNT & CARAWAY ARCHITECTS, LTD. AND MAY NOT BE USED, REPRODUCED, COPIED, OR TRANSFERRED WITHOUT THE WRITTEN CONSENT OF THE PROPRIETOR AND/OR COMPANY REPRESENTATIVE. NOR SHALL ANY DATA OR INFORMATION CONTAINED HEREIN BE USED IN PART OR IN FULL FOR ANY PURPOSE OTHER THAN THAT DESCRIBED WITHIN THESE DOCUMENTS.
\\Cifs2server\Server\WPRO_SECTS\2006\06-002-NATIONAL GUARD MARANA\NATIONAL GUARD MARANA\Bkwds\A01 Life Safety Floor Plan.dwg

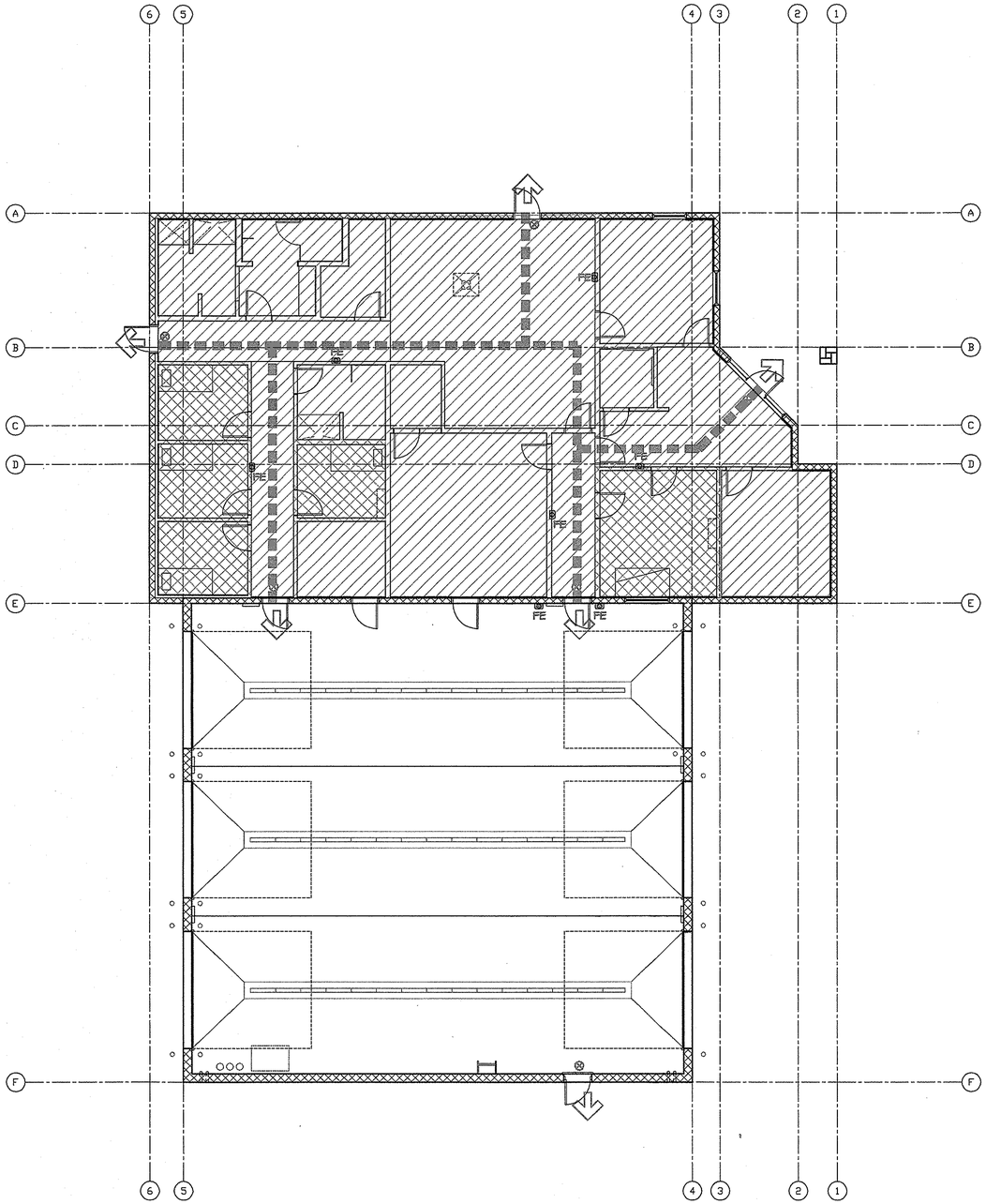

Life Safety Floor Plan

Scale: 1/8" = 1'-0"

LEGEND:

- SPACE DESIGNATED AS "R-2" OCCUPANCY W/ 1/2 HR RATED DORM ROOM WALLS AND CEILING -FIRE SPRINKLED THROUGHOUT IN LIEU OF 1 HOUR RATING
- SPACE DESIGNATED AS "B" OCCUPANCY
- SPACE DESIGNATED AS "S-2" OCCUPANCY
- MEANS OF EGRESS
- EXIT DISCHARGE
- FE — NEW FIRE EXTINGUISHER & CABINET -SEE SPECIFICATIONS FOR CABINET -SEE FIRE MARSHAL FOR EXTINGUISHER CAPACITY AND UL RATING (DRAWING TO CHANGE WITH FIRE MARSHAL REVIEW)
- EXIT SIGN -SEE ELECTRICAL

PROJECT INFORMATION:

ARCHITECT:
HUNT & CARAWAY ARCHITECTS, LTD.
7145 NORTH 57th. DRIVE
GLENDALE, ARIZONA, 85301
PHONE: 623-934-4090
FAX: 623-934-4501
CONTACT: JONATHAN SCHMID

OWNER:
AZ DEPARTMENT OF EMERGENCY AND MILITARY AFFAIRS
CONTACT: MIKE HEROD

BUILDING DATA:

USE:	FIRE STATION		
OCCUPANCY:	B, R-2, S-2		
SEPARATION REQUIRED:	ZERO		
CONSTRUCTION TYPE:	V-B (SPRINKLED)		
ALLOWABLE BUILDING AREA:	GROUP B		= 9,000
AUTOMATIC SPRINKLER SYSTEM INCREASE;			= 15,750
ALLOWABLE BUILDING AREA:	GROUP R-2		= 7,000
AUTOMATIC SPRINKLER SYSTEM INCREASE;			= 12,250
ALLOWABLE BUILDING AREA:	GROUP S-2		= 13,500
AUTOMATIC SPRINKLER SYSTEM INCREASE;			= 23,625
ALLOWABLE FLOOR AREA FOR MIXED OCCUPANCIES:			
GROUP B:	ACTUAL	1,754	
	ALLOWABLE	15,750	=0.11
GROUP R-2:	ACTUAL	587	
	ALLOWABLE	12,250	=0.05
GROUP S-2:	ACTUAL	3305	
ALLOWABLE		23,625	=0.14
TOTAL: (SUM DOES NOT EXCEED ONE)			=0.25
TOTAL ACTUAL BLDG AREA:			=6,972 S.F.
ALLOWABLE BUILDING HEIGHT:	2 STORY, 40'-0"		
PROPOSED BUILDING HEIGHT:	1 STORY, 26'-0"		
FIRE RESISTANCE RATING REQUIRED	0 HR (TABLE 601 FOR TYPE V-B)		

THIS BUILDING COMPLIES WITH THE AMERICANS WITH DISABILITIES ACT AND IS DESIGNED TO BE ACCESSIBLE TO, AND USABLE BY PERSONS WITH DISABILITIES.

FIRE SPRINKLERS SHALL BE A DEFFERED SUBMITTAL

REQUIRED FIXTURES:		PROVIDED:
WATER CLOSET (MALE):	1	2
WATER CLOSET (FEMALE):	1	2
URINALS	1	2
LAVATORIES (MALE):	1	2 W/ ADA
LAVATORIES (FEMALE):	1	2 W/ ADA
DRINKING FOUNTAIN:	1	2 (1 W/ ADA)
SERVICE SINK:	1	2
BATHUBS OR SHOWERS:	1	3 (2 W/ ADA)
KITCHEN SINK:	1	2
CLOTHES WASHER:	1	1

PARKING CALCULATIONS:

NUMBER OF STAFF (2 LARGEST SHIFTS):	= 10 PERSONS / 3	= 4 SPACES
REQUIRED ACCESSIBLE SPACES:		= 1 SPACE
TOTAL SPACES REQUIRED:		= 5 SPACES
ACCESSIBLE SPACES PROVIDED:		= 1 SPACES
STANDARD SPACES		= 6 SPACES
TOTAL SPACES PROVIDED		= 7 SPACES

APPLICABLE CODES:

INTERNATIONAL BUILDING CODE	2000 EDITION
INTERNATIONAL PLUMBING CODE	2000 EDITION
INTERNATIONAL MECHANICAL CODE	2000 EDITION
INTERNATIONAL FUEL GAS CODE	2000 EDITION
INTERNATIONAL FIRE CODE	2000 EDITION
INTERNATIONAL PROPERTY MAINTENANCE CODE	2000 EDITION
INTERNATIONAL ENERGY CODE	2000 EDITION
NATIONAL ELECTRIC CODE	1999 EDITION
2003 ICC/ A117.1	2003 VERSION

HUNT & CARAWAY
Architects, ltd.
7145 North 57th Drive
Glendale, Arizona 85301
Voice (623) 934-4090 Fax (623) 934-4501

Arizona Army National Guard
Silverbell Fire Station No. 361
For
AZ Department of Emergency and Military Affairs

Life Safety Floor Plan

Revisions:

Drawn by:	T.A.
Checked by:	J.S.
Scale:	As Shown
Date:	08/21/06

REGISTERED ARCHITECT
CERTIFICATE NO. 22538
TAMARA D. CARAWAY
Date Signed 8-21-06
ARIZONA, U.S.A.

JOB # 06-002

SHEET
A0.1

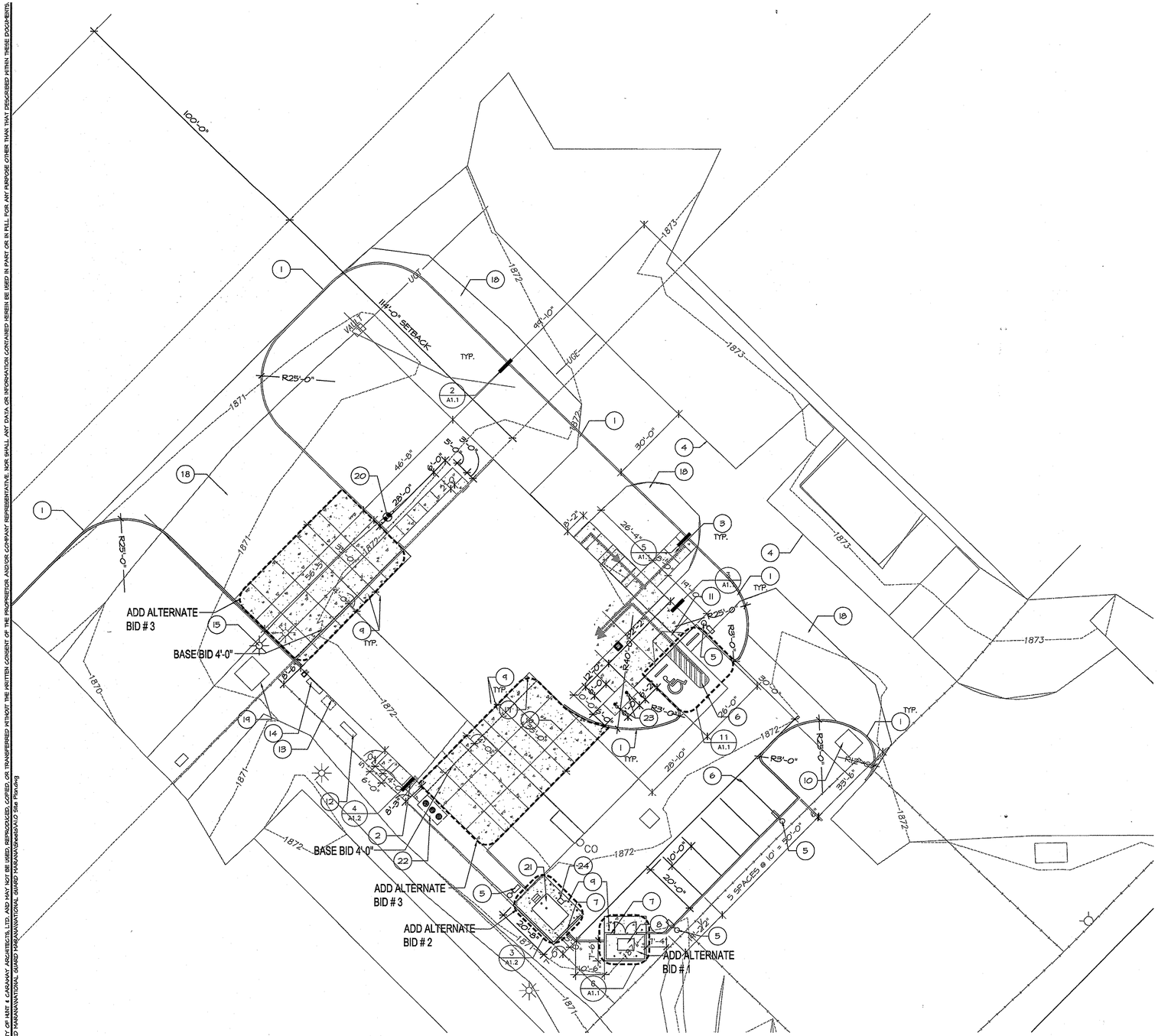

Site Plan

SCALE: 1" = 20'

LEGEND

- CONCRETE SIDEWALK/DRIVE
- NEW ASPHALT PAVEMENT - SEE CIVIL DRAWINGS
- ACCESSIBLE ROUTES

KEYNOTES:

1. NEW 6" HIGH CONCRETE CURB - SEE DETAILS 2 & 5/A1.1
2. WALK EDGE W/ DRAINAGE PIPE DAYLITE AT CONCRETE EDGE - SEE DETAIL 4/A1.2
3. NEW CONCRETE SIDEWALK - SEE CIVIL
4. EXISTING CONCRETE CURB AND/OR SIDEWALK
5. NEW LIGHT POLE - SEE ELECTRICAL & STRUCTURAL
6. NEW PAINTED PARKING STRIPES - SEE COVER SHEET FOR PARKING CALCULATION
7. NEW 6' HIGH CMU WALL -PAINT TO MATCH BUILDING COLOR - SEE DETAIL 10/A1.1
8. ALT. BID # 1 - NEW TRASH ENCLOSURE - SEE DETAIL 6/A1.1
9. NEW BOLLARDS - SEE DETAIL 1/A1.1
10. NEW HAND HOLE - SEE ELECTRICAL
11. NEW HANDICAP ACCESSIBLE RAMP - SEE DETAIL 7/A1.1
12. NEW GENERATOR - SEE ELECTRICAL
13. NEW TRANSFER SWITCH - SEE ELECTRICAL
14. NEW SES - SEE ELECTRICAL
15. RELOCATED EXISTING LIGHT POLE ON TO NEW CONCRETE BASE - SEE STRUCTURAL & ELECTRICAL
16. CONSTRUCTION JOINT - SEE DETAIL 4/A1.1
17. NEW EMERGENCY SHUTOFF SWITCH FOR FUEL TANK - SEE ELECTRICAL
18. NEW ASPHALT PAVEMENT - SEE CIVIL
19. NEW TRANSFORMER - SEE ELECTRICAL
20. NEW FIRE HYDRANT - SEE DETAIL 2/A1.2
21. ALT. BID # 2 - NEW CONVAULT 2000 GAL. FUEL TANK - SEE DETAIL 3/A1.2
22. NEW SAND & OIL INTERCEPTOR -SEE PLUMBING
23. NEW FLAG POLES W/ LIGHTS AT BASE - SEE DETAIL 1/A1.2
24. ALT. BID # 2 - FUEL DISPENSER W/ ASSOCIATED TANK CONNECTION

HUNT & CARAWAY
Architects, ltd.

7145 North 57th Drive
Glendale, Arizona 85301
Voice (623) 934-4090 Fax (623) 934-4501

Arizona Army National Guard
Silverbell Fire Station No. 361
For
AZ Department of Emergency and Military Affairs

Site Plan

Revisions:

Drawn by:	T.A.
Checked by:	J.S.
Scale:	As Shown
Date:	08/21/06

REGISTERED ARCHITECT
CERTIFICATE NO.
22538
TAMARA D. CARAWAY
Date Signed 8-21-06
ARIZONA, U.S.A.

JOB #
06-002

SHEET
A1.0

THIS DRAWING & THE DATA CONTAINED HEREIN ARE THE PROPERTY OF HUNT & CARAWAY ARCHITECTS, LTD. AND MAY NOT BE USED, REPRODUCED, COPIED, OR TRANSFERRED WITHOUT THE WRITTEN CONSENT OF THE PROPRIETOR AND/OR COMPANY REPRESENTATIVE. NOR SHALL ANY DATA OR INFORMATION CONTAINED HEREIN BE USED IN PART OR IN FULL FOR ANY PURPOSE OTHER THAN THAT DESCRIBED WITHIN THESE DOCUMENTS.

THIS DRAWING & THE DATA CONTAINED HEREIN ARE THE PROPERTY OF HUNT & CARAWAY ARCHITECTS, LTD. AND MAY NOT BE USED, REPRODUCED, COPIED, OR TRANSFERRED WITHOUT THE WRITTEN CONSENT OF THE PROPRIETOR AND/OR COMPANY REPRESENTATIVE. NOR SHALL ANY DATA OR INFORMATION CONTAINED HEREIN BE USED IN PART OR IN FULL FOR ANY PURPOSE OTHER THAN THAT DESCRIBED WITHIN THESE DOCUMENTS.
\\CITRaserver\Server\PROJECTS\2006\06-002-NATIONAL GUARD YARANA\NATIONAL GUARD YARANA\Sheets\A1.1 Site details.dwg

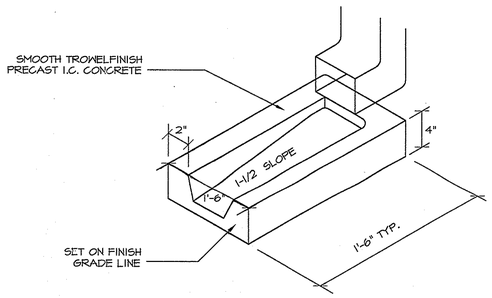

NOTE:
PROVIDE ONE SPLASHBLOCK AT PLANTERS & ASPHALT PAVED AREAS BELOW ROOF LEADERS & SCUPPERS

NOTE:
SEE DETAIL4/A1.2

12 Splashblock w/ Downspout
SPLASHBLOCK WITH DOWNSPOUT SCALE: N.T.S.

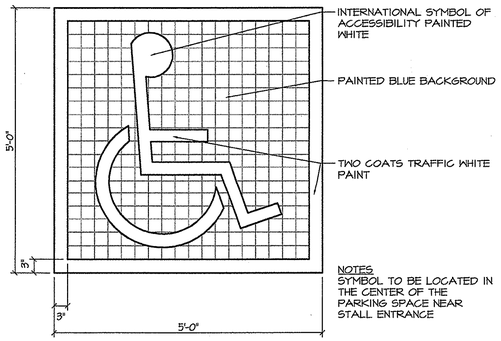

NOTES
SYMBOL TO BE LOCATED IN THE CENTER OF THE PARKING SPACE NEAR STALL ENTRANCE

9 Symbol Of Accessibility
SYMBOL OF ACCESSIBILITY SCALE: 3/4"=1'-0"

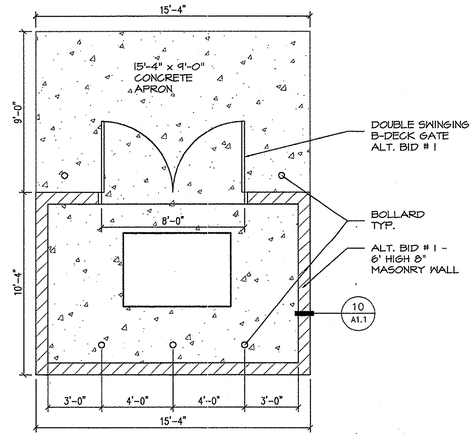

6 Trash Enclosure
TRASH ENCLOSURE SCALE: 1/4"=1'-0"

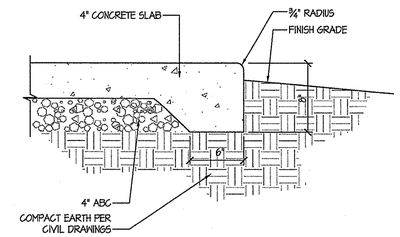

3 Walk Edge at Grade
WALK EDGE AT GRADE SCALE: 1 1/2"=1'-0"

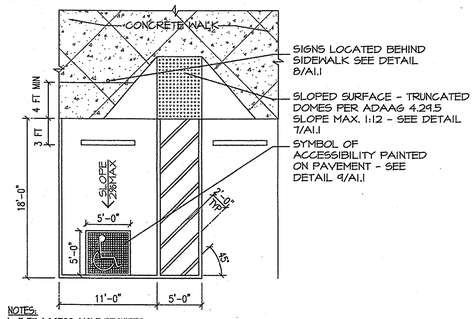

NOTES:
1. 5 FT ACCESS AISLE REQUIRED
2. ACCESS SPACES MUST BE PROMINENTLY OUTLINED IN COLORS OR MATERIALS CONTRASTING FROM REGULAR PARKING SPACES
- 4" OUTLINE STRIPING REQUIRED (TRAFFIC YELLOW PREFERRED)
- ACCESS AISLE SHALL BE CLEARLY MARKED (CROSSHATCHING STRIPES SPACES 2 FT O.C. PREFERRED.

3. INTERNATIONAL ACCESSIBLE SYMBOL REQUIRED. BLUE AND YELLOW SIMBOLS PREFFERED. A SYMBOL CAN BE DISPLAYED WITHOUT BLUE BACKGROUND.
4. ACCESSIBLE SIGN REQUIRED - MUST NEVER BE OBSCURED.
5. ONE OUT OF EVERY 8 SPACES SHALL HAVE A MINIMUM VERTICAL CLEARANCE OF 8 FT - 2 INCHES AT GARAGES AND UNDER CANOPIES.
6. SEE PARKING AREA DIMENSION POLICIES FOR ANGLED PARKING.
7. SEE ZONING ORDINANCE SECTION 702 FOR THE LAYOUT SPECIFICATION FOR ASSIGNED MULTI FAMILY ACCESSIBLE PARKING SPACES.

11 ADA Parking Stall
ADA Parking Stall SCALE: 1/8"=1'-0"

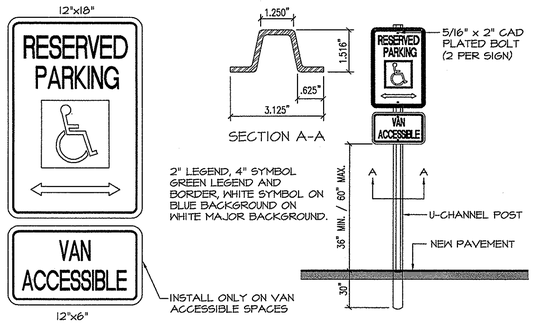

8 Reserved Parking Sign
RESERVED PARKING SIGN SCALE: 1/2"=1'-0"

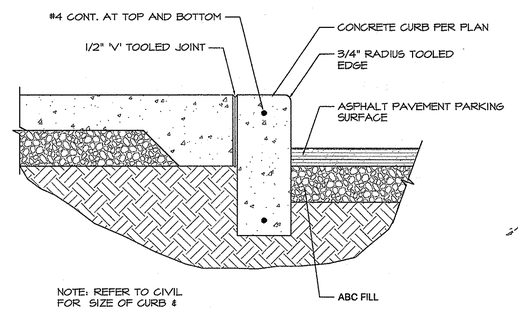

NOTE: REFER TO CIVIL FOR SIZE OF CURB & ASPHALT

5 Sidewalk And Curb At Pavement
SIDEWALK & CURB @ PAVEMENT SCALE: 1 1/2"=1'-0"

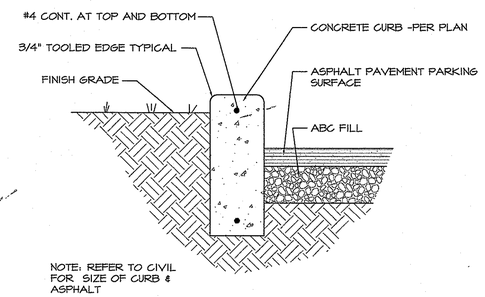

NOTE: REFER TO CIVIL FOR SIZE OF CURB & ASPHALT

2 Curb At Pavement
CURB @ PAVEMENT SCALE: 1 1/2"=1'-0"

NOTE:
WALL COLOR TO MATCH BUILDING COLOR - SEE COLOR SCHEDULE

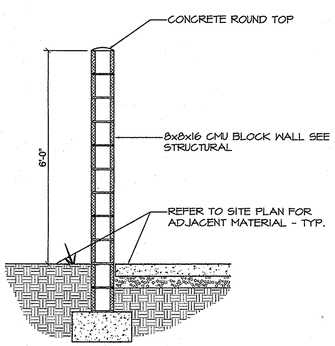

10 Site Wall Detail
SITE WALL DETAIL SCALE: 1/2"=1'-0"

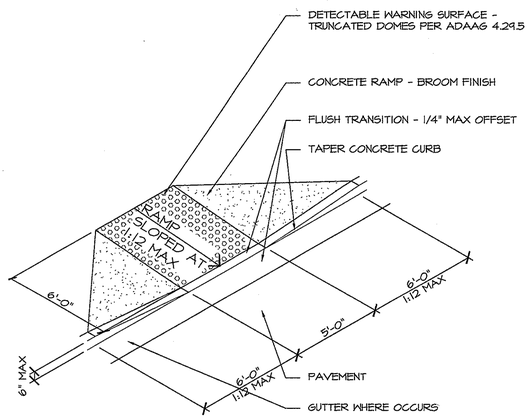

NOTE: MAX. 1:20 COUNTERSLOPE AT ADJOINING GUTTER AND/OR PAVEMENT

7 Ramp Detail
RAMP DETAIL SCALE: 1/4"=1'-0"

SAWN JOINTS AT 15'-0" O.C. MAX.

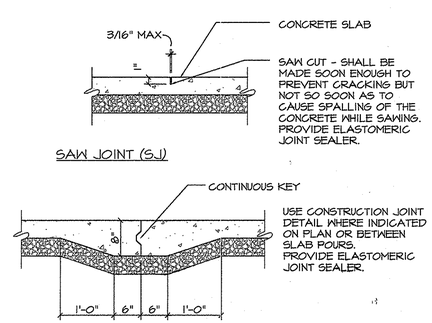

4 Sidewalk Slab Joints
SIDEWALK SLAB JOINTS SCALE: 3/4"=1'-0"

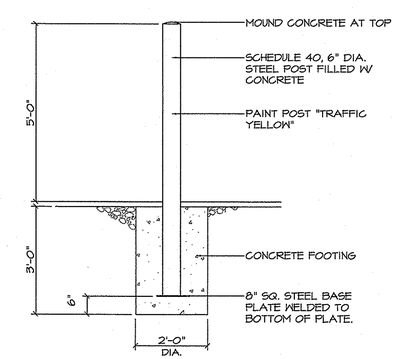

1 Bollard
BOLLARD SCALE: 1/2"=1'-0"

HUNT & CARAWAY
Architects, ltd.
7145 North 57th Drive
Glendale, Arizona 85301
Voice (623) 934-4090 Fax (623) 934-4501

Arizona Army National Guard
Silverbell Fire Station No. 361
For
AZ Department of Emergency and Military Affairs

Site Details

Revisions:

Drawn by:	T.A.
Checked by:	J.S.
Scale:	As Shown
Date:	08/21/06

REGISTERED ARCHITECT CERTIFICATE NO. 22538 TAMARA D. CARAWAY ARIZONA, U.S.A.

JOB # 06-002

SHEET
A1.1

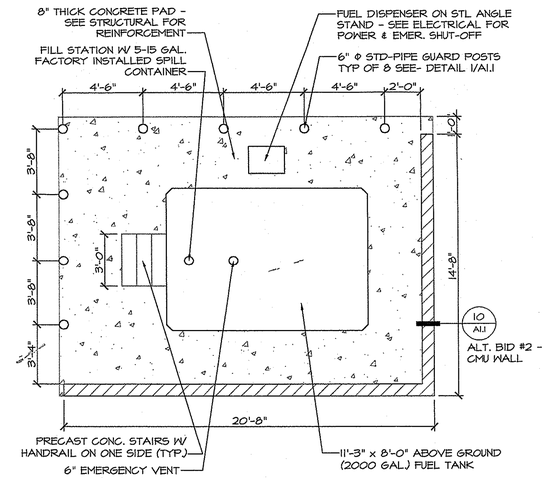

3 FUEL TANK ENCLOSURE — Fuel Tank Enclosure — SCALE: 1/4"=1'-0"

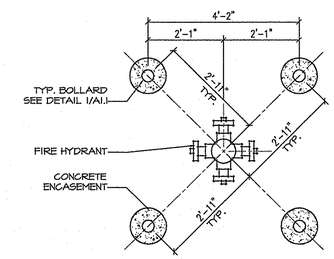

2 FIRE HYDRANT — On-Site Fite Hydrant — SCALE: 1/2"=1'-0"

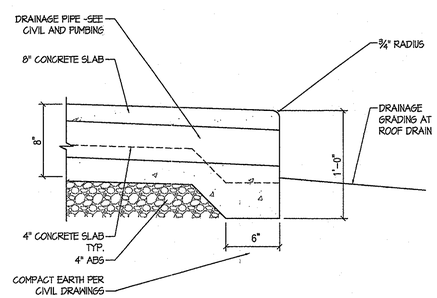

4 WALK EDGE W/ PIPE — Walk Edge w/ Drainage Pipe — SCALE: 1 1/2"=1'-0"

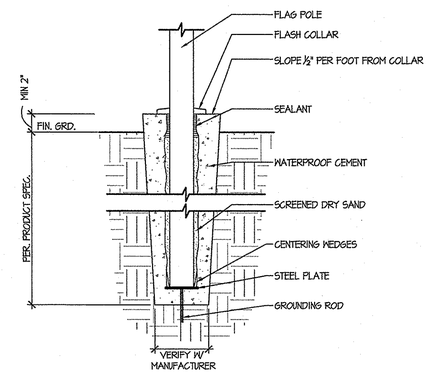

1 FLAG POLE BASE — Flag Pole Base — SCALE: 1 1/2"=1'-0"

HUNT & CARAWAY
Architects, ltd.
7145 North 57th Drive
Glendale, Arizona 85301
Voice (623) 934-4090 Fax (623) 934-4501

Arizona Army National Guard
Silverbell Fire Station No. 361
For
AZ Department of Emergency and Military Affairs

Site Details

Revisions:

Drawn by:	T.A.
Checked by:	J.S.
Scale:	As Shown
Date:	08/21/06

REGISTERED ARCHITECT
CERTIFICATE NO.
22538
TAMARA D. CARAWAY
Date Signed 08-21-06
ARIZONA, U.S.A.

JOB #
06-002

SHEET
A1.2

THIS DRAWING & THE DATA CONTAINED HEREIN ARE THE PROPERTY OF HUNT & CARAWAY ARCHITECTS, LTD. AND MAY NOT BE USED, REPRODUCED, COPIED, OR TRANSFERRED WITHOUT THE WRITTEN CONSENT OF THE PROPRIETOR AND/OR COMPANY REPRESENTATIVE. NOR SHALL ANY DATA OR INFORMATION CONTAINED HEREIN BE USED IN PART OR IN FULL FOR ANY PURPOSE OTHER THAN THAT DESCRIBED WITHIN THESE DOCUMENTS.
\\Officeserver\Server\PROJECTS\2006\06-002-NATIONAL GUARD MARANA\NATIONAL GUARD MARANA\Sheets\A1.2 Site Details.dwg

THIS DRAWING & THE DATA CONTAINED HEREIN ARE THE PROPERTY OF HUNT & CARAWAY ARCHITECTS, LTD. AND MAY NOT BE USED, REPRODUCED, COPIED, OR TRANSFERRED WITHOUT THE WRITTEN CONSENT OF THE PROPRIETOR AND/OR COMPANY REPRESENTATIVE. NOR SHALL ANY DATA OR INFORMATION CONTAINED HEREIN BE USED IN PART OR IN FULL FOR ANY PURPOSE OTHER THAN THAT PRESCRIBED WITHIN THESE DOCUMENTS.
\\office-server\server\PROJECTS\2006\06-002-NATIONAL GUARD MARANA\NATIONAL GUARD MARANA\Sheets\A2.0 Architectural Floor Plan.dwg

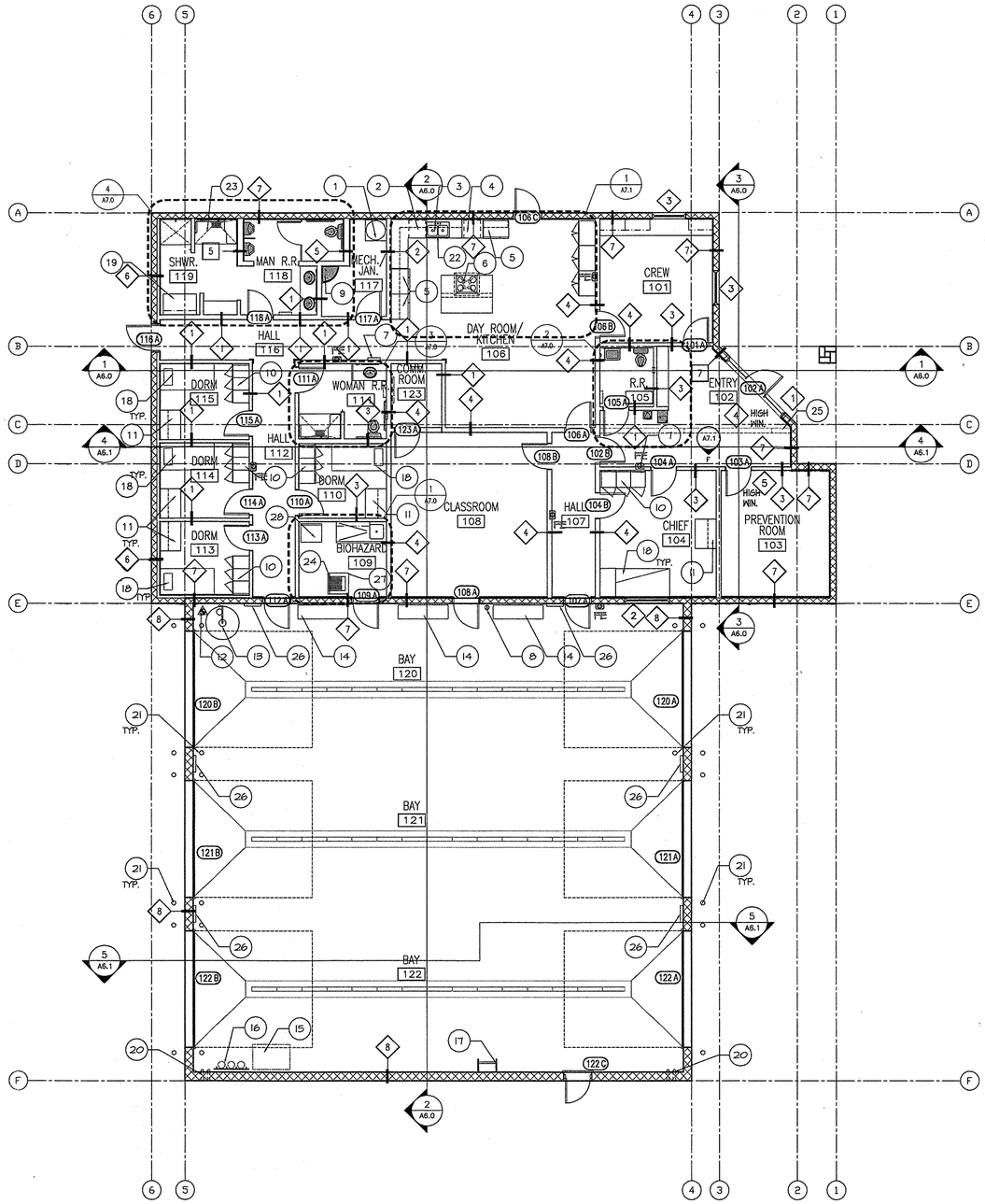

Floor Plan

SCALE:1/8" = 1'-0"

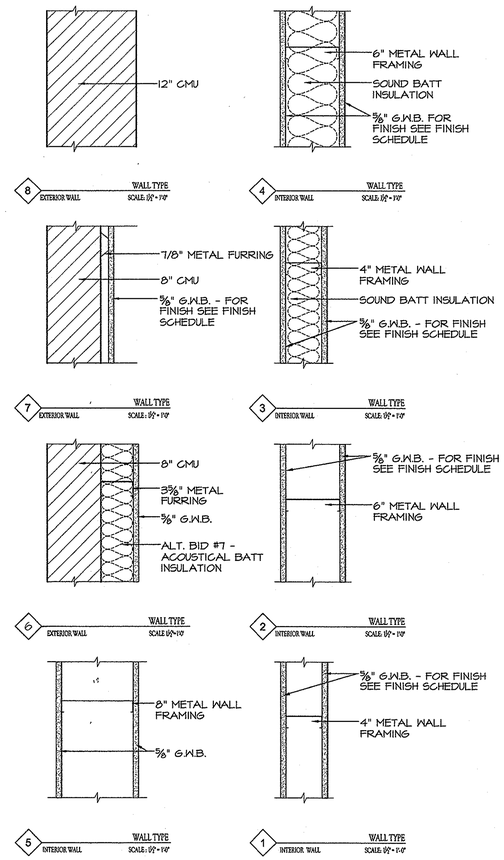

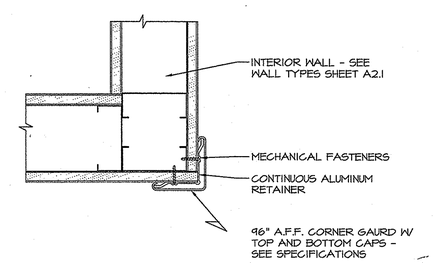

1 CORNER GUARD — Corner Guard SCALE: 3"=1'-0"

KEYNOTES:

1. ELEC. WATER HEATER -SEE ELECTRICAL
2. DISH WASHER -SEE SPECIFICATIONS
3. DOUBLE COMPARTMENT KITCHEN SINK WITH GARBAGE DISPOSAL -SEE PLUMBING
4. ELECT. OVEN / MICROWAVE COMBO UNIT -SEE SPECIFICATIONS
5. REFRIG. W/ ICEMAKER & CHILLED WATER DISP. -SEE SPECIFICATIONS
6. ELECT. OVEN & RANGE -SEE SPECIFICATIONS
7. SEMI-RECESSED FIRE CABINET W/ EXTINGUISHER -SEE SPECIFICATIONS
8. WALL MOUNTED FIRE EXTINGUISHER -SEE SPECIFICATIONS
9. MOP SINK WITH FRP BACKSPLASH 4'-0" IN BOTH DIRECTIONS AND 4'-0" TALL -SEE PLUMBING
10. ROOM LOCKERS -SEE DETAIL 4/A7.1
11. DESK - SEE DETAIL 6/A7.1
12. FIRE RISER - SEE PLUMBING
13. EMERGENCY SHOWER & EYEWASH - SEE PLUMBING
14. MOBILE TURNOUT GEAR STORAGE, TO BE PROVIDED BY OWNER
15. COMPRESSOR TO BE PROVIDED BY OWNER
16. COMPRESSED AIR TANKS TO BE PROVIDED BY OWNER
17. WALL MOUNTED LADDER W/ ROOF HATCH - SEE 10/A4.1
18. BED - SEE DETAIL 2/A7.1
19. BENCH SEAT - SEE SPECIFICATIONS
20. ROOF DRAIN & OVERFLOW PIPES - SEE PLUMBING
21. BOLLARD - SEE DETAIL 1/A1.1
22. LOCKERS @ ROOM - SEE DETAIL 4/A7.1
23. 2" DEPRESSED SLAB TO BE GROUTED FLUSH WITH FINISHED FLOOR AND SLOPE TO DRAIN PER A.D.A.
24. FLOOR DRAIN - SEE DETAIL 6/A6.1
25. HIGH WALL W/ WINDOW - SEE BUILDING SECTION 3/A6.1 AND WINDOW SCHEDULE SHEET A8.0
26. DOOR OPERATION PANEL - SEE ELECTRICAL FOR TYPE AND LOCATION
27. EXTRACTOR -SEE SPECIFICATIONS
28. DRYER -SEE SPECIFICATIONS

LEGEND:

- XXX — ROOM NUMBER - SEE ROOM FINISH SCHEDULE A8.5
- X — KEYNOTES - SEE THIS SHEET
- WX — WINDOW TYPE - SEE A8.5
- X — WALL TYPE - SEE A8.5
- XXXX — DOOR TYPE - SEE DOOR SCHEDULE A8.5
- CORNER GUARD - SEE DETAIL 1/A2.0

HUNT & CARAWAY
Architects, ltd.
7145 North 57th Drive
Glendale, Arizona 85301
Voice (623) 934-4090 Fax (623) 934-4501

Arizona Army National Guard
Silverbell Fire Station No. 361
For
AZ Department of Emergency and Military Affairs

Floor Plan

Revisions:

Drawn by:	T.A.
Checked by:	J.S.
Scale:	As Shown
Date:	08/21/06

REGISTERED ARCHITECT CERTIFICATE NO. 22538 TAMARA D. CARAWAY Expires 12/31/07 ARIZONA, U.S.A.

JOB # 06-002

SHEET A2.0

THIS DRAWING & THE DATA CONTAINED HEREIN ARE THE PROPERTY OF HUNT & CARAWAY ARCHITECTS, LTD. AND MAY NOT BE USED, REPRODUCED, COPIED, OR TRANSFERRED WITHOUT THE WRITTEN CONSENT OF THE PROPRIETOR AND/OR COMPANY REPRESENTATIVE, NOR SHALL ANY DATA OR INFORMATION CONTAINED HEREIN BE USED IN PART OR IN FULL FOR ANY PURPOSE OTHER THAN THAT DESCRIBED WITHIN THESE DOCUMENTS.
\\OfficeserverServer\PROJECTS\2006\06-002-NATIONAL GUARD MARANA\NATIONAL GUARD MARANA\Models\A21 Architectural Dimension Plan.dwg

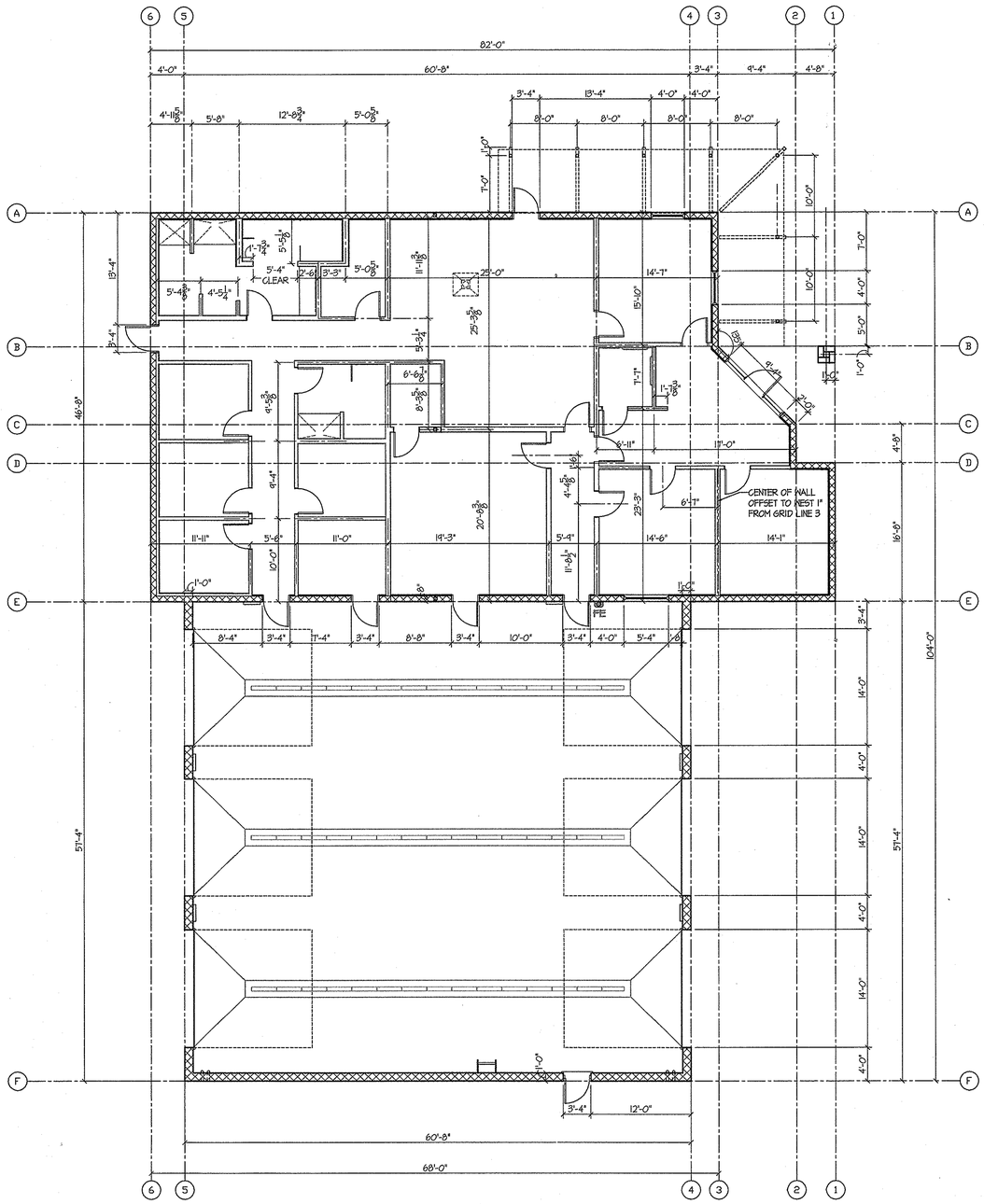

Dimension Plan

SCALE: 1/8" = 1'-0"

HUNT & CARAWAY
Architects, ltd.
7145 North 57th Drive
Glendale, Arizona 85301
Voice (623) 934-4090 Fax (623) 934-4501

Arizona Army National Guard
Silverbell Fire Station No. 361

For

AZ Department of Emergency and Military Affairs

Dimension Plan

Revisions:

Drawn by:	T.A.
Checked by:	J.S.
Scale:	As Shown
Date:	08/21/06

REGISTERED ARCHITECT
CERTIFICATE NO.
22538
TAMARA D. CARAWAY
Signed 08/21/06
ARIZONA, U.S.A.

JOB #
06-002

SHEET
A2.1

THIS DRAWING & THE DATA CONTAINED HEREIN ARE THE PROPERTY OF HUNT & CARAWAY ARCHITECTS, LTD. AND MAY NOT BE USED, REPRODUCED, COPIED, OR TRANSFERRED WITHOUT THE WRITTEN CONSENT OF THE PROPRIETOR, AND/OR COMPANY REPRESENTATIVE. NOR SHALL ANY DATA OR INFORMATION CONTAINED HEREIN BE USED IN PART OR IN FULL FOR ANY PURPOSE OTHER THAN THAT DESCRIBED WITHIN THESE DOCUMENTS.

V:\Drawings\PROJECTS\2006\06-002-NATIONAL GUARD MARANA\NATIONAL GUARD MARANA\Sheets\A3.0 Architectural Reflected Ceiling Plan.dwg

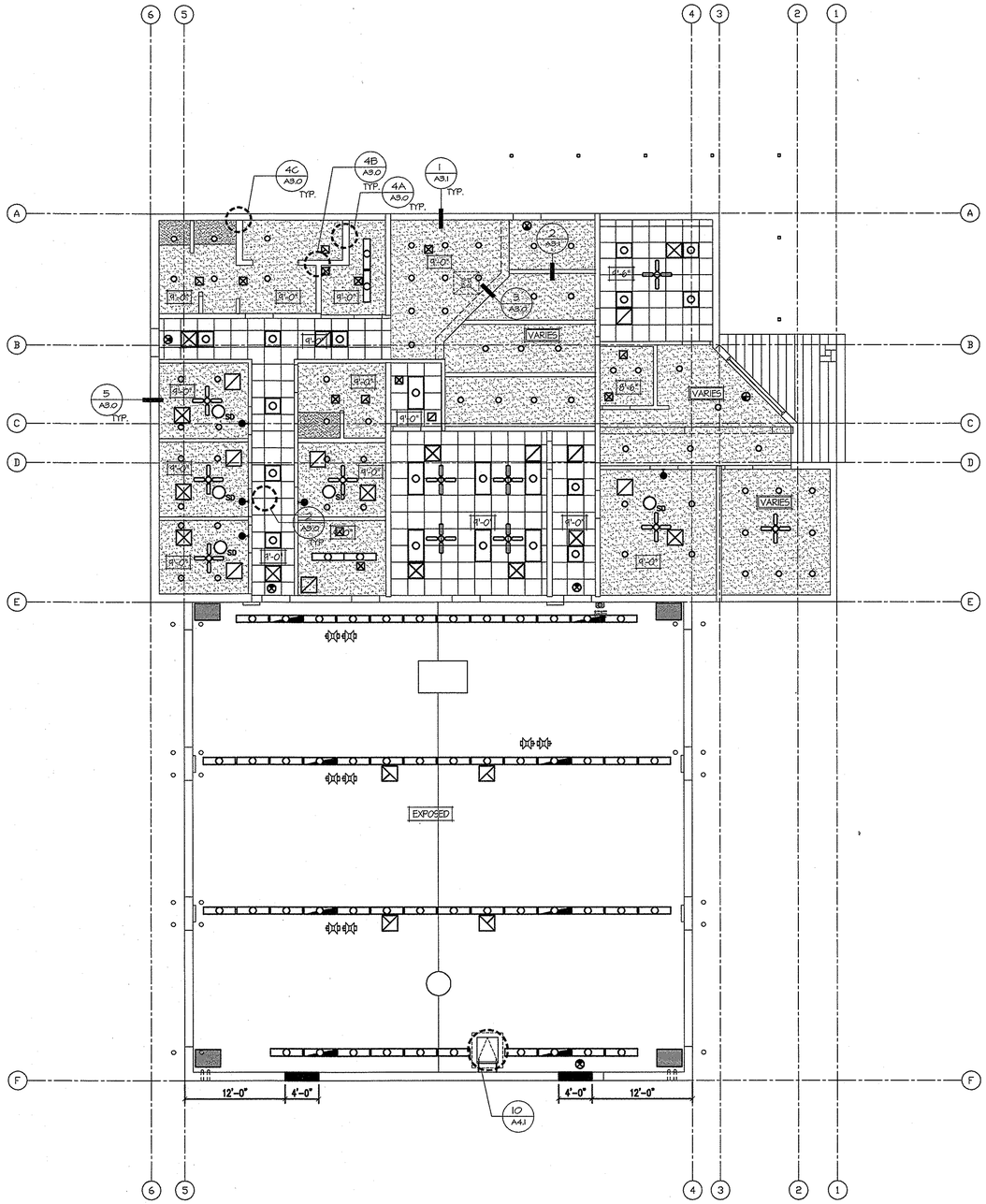

Reflected Ceiling Plan

SCALE: 1/8" = 1'-0"

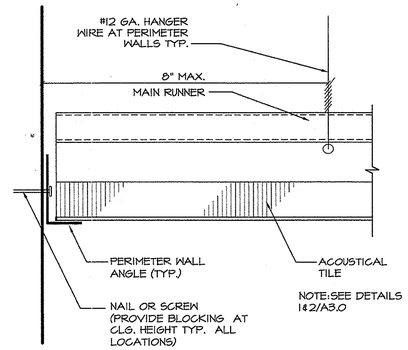

5 Suspended Ceiling Grid To Wall
SUSPENDED CEILING GRID TO WALL — SCALE: 6"=1'-0"

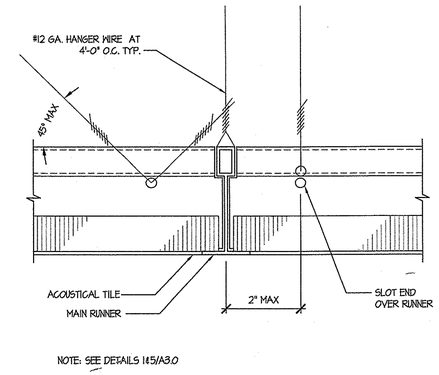

2 Suspended Ceiling Grid Main Runner
SUSPENDED CEILING GRID MAIN RUNNERS — SCALE: 6"=1'-0"

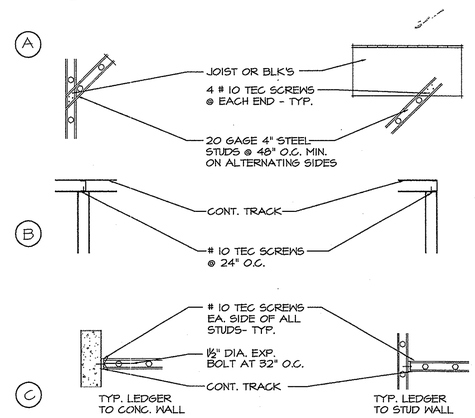

NOTE: ALL INTERIOR METAL STUDS ARE 20 GAUGE 4" STEEL STUDS @24" O.C. TYPICAL UNLESS NOTED OTHERWISE - ICBO#EF4443-P

4 Wall Bracing Details
WALL BRACING DETAIL — SCALE: 3/4" = 1'-0"

NOTE: CONTRACTOR SHALL SUBMIT CALCULATIONS AND TEST REPORTS FOR METAL SUSPENSION SYSTEM IN ACCORDANCE WITH ABC NEW STANDARD TO THE BUILDING OFFICAL FOR APPROVAL.

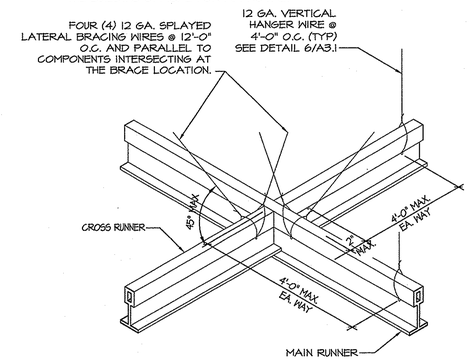

NOTE: SEE DETAILS 2&5/A3.0

1 Suspended Ceiling Grid Isometric
SUSPENDED CEILING GRID ISOMETRIC — SCALE: 1 1/2"=1'-0"

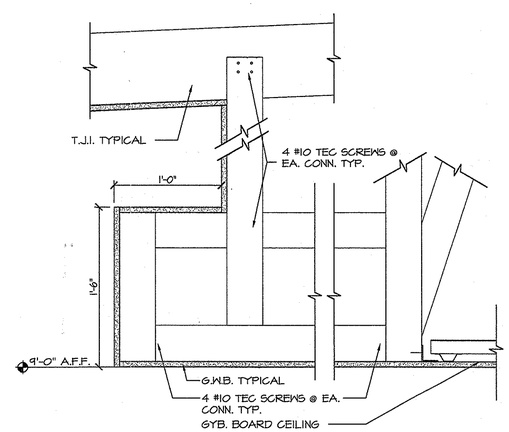

* ALL INT. METAL STUDS ARE 20 GAGE 4" STEEL STUDS @ 24" O.C. TYPICAL UNLESS NOTED OTHERWISE - ICBO # EF4443-P

3 Plant Shelf Detail
PLANT SHELF DETAIL — SCALE: 1 1/2"=1'-0"

CEILING PLAN LEGEND

- 1' x 4' FLOURESCENT LIGHT
- 2' x 2' FLOURESCENT LIGHT
- CAN LIGHT
- SUPPLY AIR GRILLE
- RETURN AIR GRILLE
- 2' x 4' FLOURESCENT LIGHT
- 2' x 2' SUSPENDED CEILING
- GYPSUM BOARD CEILING - SEE LIFESAFETY PLAN SHEET FOR FIRE RATING
- W.R. GYPSUM BOARD CEILING - SEE LIFESAFETY PLAN SHEET FOR FIRERATING
- CEILING FAN
- EXIT SIGN
- CEILING MOUNTED HOSE REEL - SEE PLUMBING & ELEC.
- EMERGENCY LIGHT - SEE ELECTRICAL E/4.1
- SD SMOKE DETECTOR
- RELIEF LOUVER 48" WIDE x 40" HIGH AT +16' AFF - SEE MECHANICAL
- ELECTRICAL FURNACE - SEE MECHANICAL, ELECTRICAL -FURNACE UNIT IS N.I.C. METAL SOFFIT

GENERAL NOTES

1. SEE ELECTRICAL DRAWINGS & SPECIFICATIONS FOR EXACT FIXTURE TYPES & REQUIREMENTS
2. SEE MECHANICAL DRAWINGS & SPECIFICATIONS FOR EXACT FIXTURE TYPES & REQUIREMENTS
3. FOR EXACT SIZE AND TYPE OF VENT HOOD & CEILING PENETRATION, SEE MECHANICAL DRAWINGS
4. ALL CEILING PENETRATIONS IN G.W.B. CEILINGS SHALL BE SEALED AND CONDUIT OR SIM. SHALL HAVE APPROPRIATE ESCUTCHEON OR FINISH PLATE AS SUPPLIED, FURNISHED OR REQ'D BY MANUF.
5. FIXTURES IN CEILING TILES SHALL BE LOCATED IN THE EXACT CENTER OF TILE & INSTALLED W/ MANUFACTURER'S TRIM PIECE AVAILABLE BY FIXTURE OR CEILING MANUFACTURER.
6. CEILINGS SHALL BE ADEQUATELY BRACED FOR SEISMIC ZONE 2 B/MIN 12GA WIRE OR AS REQUIRED OR SPECIFIED.
7. ALL SUSPENDED CEILING LIGHT FIXTURES SHALL HAVE SLACK WIRES AT OPPOSITE CORNERS OF LIGHT ATTACHED TO ROOF STRUCTURE.

HUNT & CARAWAY
Architects, ltd.
7145 North 57th Drive
Glendale, Arizona 85301
Voice (623) 934-4090 Fax (623) 934-4501

Arizona Army National Guard
Silverbell Fire Station No. 361
For
AZ Department of Emergency and Military Affairs

Reflected Ceiling Plan

Revisions:

Drawn by:	T.A.
Checked by:	J.S.
Scale:	As Shown
Date:	08/21/06

REGISTERED ARCHITECT CERTIFICATE NO. 22538 TAMARA D. CARAWAY Date Signed 8-21-06 ARIZONA, U.S.A.

JOB # 06-002

SHEET A3.0

THIS DRAWING & THE DATA CONTAINED HEREIN ARE THE PROPERTY OF HUNT & CARAWAY ARCHITECTS, LTD. AND MAY NOT BE USED, REPRODUCED, COPIED, OR TRANSFERRED WITHOUT THE WRITTEN CONSENT OF THE PROPRIETOR AND/OR COMPANY REPRESENTATIVE. NOR SHALL ANY DATA OR INFORMATION CONTAINED HEREIN BE USED IN PART OR IN FULL FOR ANY PURPOSE OTHER THAN THAT DESCRIBED WITHIN THESE DOCUMENTS.
\\Office-server\Server\PROJECTS\2006\06-002-NATIONAL GUARD MARANA\NATIONAL GUARD MARANA\Models\A3.1 Ceiling Details.dwg

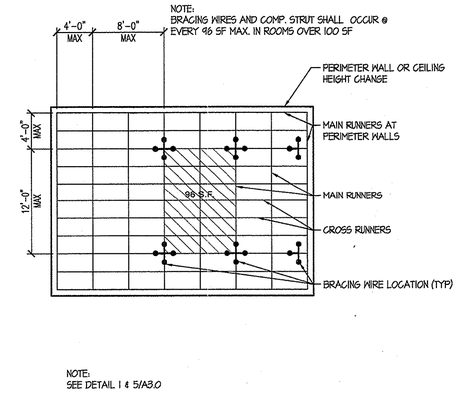

NOTE:
SEE DETAIL 1 & 5/A3.0

6 SUSPENDED CEILING GRID — **Suspended Ceiling Grid** — SCALE: 1/8"=1'-0"

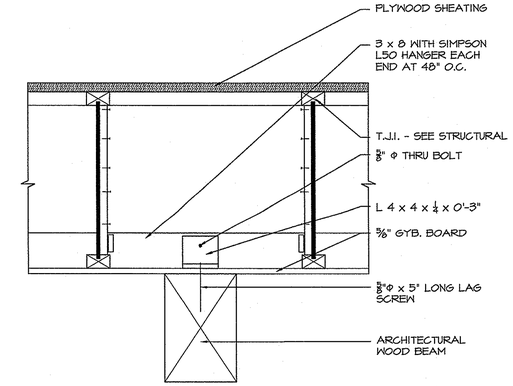

3 BEAM SUPPORT — **Architectural Beam Support** — SCALE: 1 1/2"=1'-0"

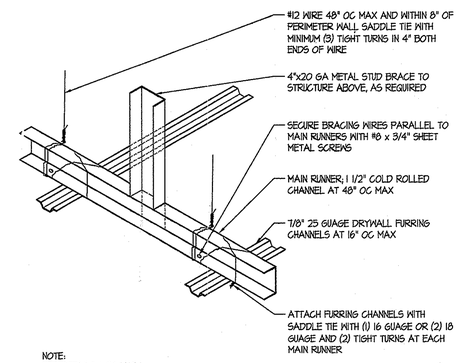

NOTE:
SEE DETAILS 1; 2&4/A3.1

5 GYPSUM WALLBOARD CEILING SUPPORT — **Suspended Gypsum Ceiling Support** — SCALE: 3"=1'-0"

NOTE: BRACING WIRES MAY BE DELETED AT CONTINUOUS LEVEL CEILING WITH FOUR PERIMETER WALLS AND POSITIVE ATTACHMENT TO WALLS

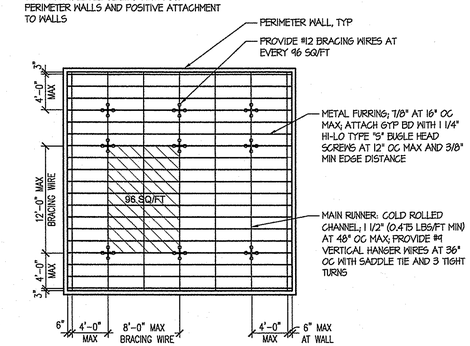

NOTE:
SEE DETAILS 1; 4&5/A3.1

2 SUSPENDED GYPSUM CEILING — **Suspended Gypsum Board Ceiling** — SCALE: 1/8"=1'-0"

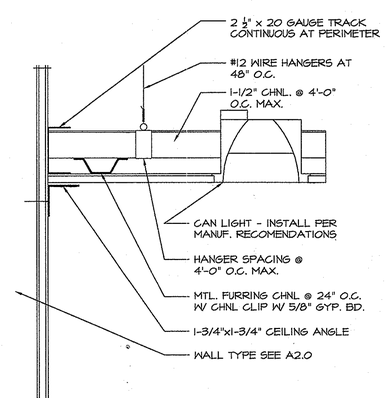

NOTE:
SEE DETAILS 1; 2&5/A3.1

4 CEILING SOFFIT — **Ceilings Soffit** — SCALE: 3"=1'-0"

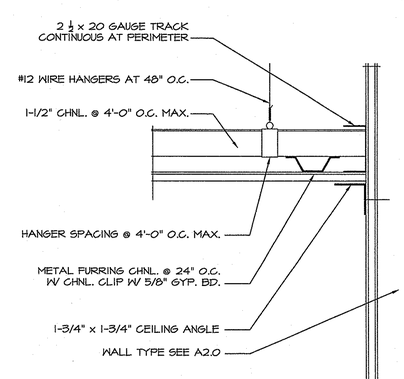

NOTE:
SEE DETAILS 2; 4&5/A3.1

1 CEILING — **Gyb. Board Ceiling** — SCALE: 3"=1'-0"

HUNT & CARAWAY
Architects, ltd.
7145 North 57th Drive
Glendale, Arizona 85301
Voice (623) 934-4090 Fax (623) 934-4501

Arizona Army National Guard
Silverbell Fire Station No. 361
For
AZ Department of Emergency and Military Affairs

Ceiling Details

Revisions:

Drawn by:	T.A.
Checked by:	J.S.
Scale:	As Shown
Date:	08/21/06

REGISTERED ARCHITECT
CERTIFICATE NO. 22538
TAMARA D. CARAWAY
Expires 3/31/2008
ARIZONA, U.S.A.

JOB # 06-002

SHEET
A3.1

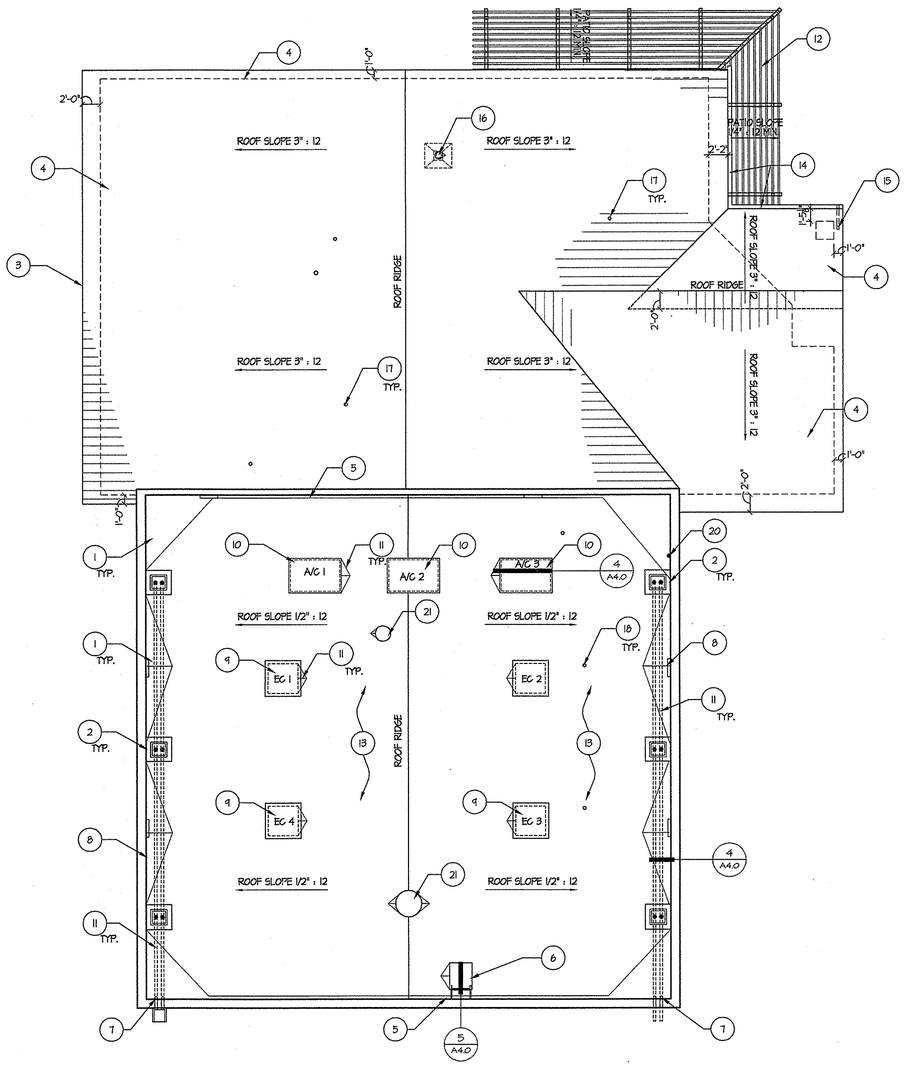

Roof Plan

SCALE: 1/8" = 1'-0"

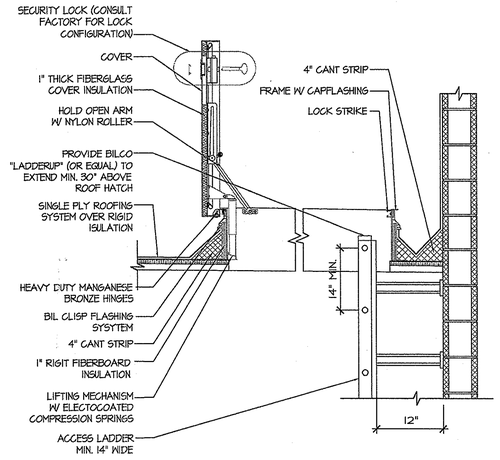

5 ROOF HATCH — Roof Hatch
SCALE: 3/4"=1'-0"

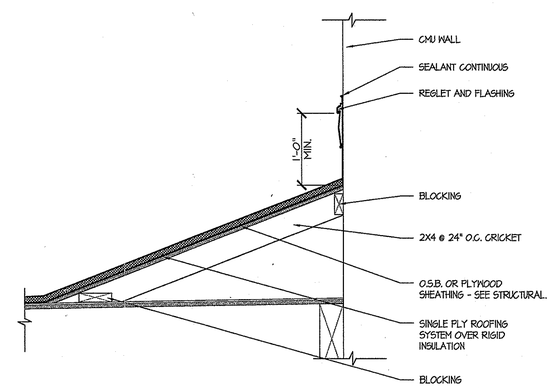

4 — Cricket
SCALE: 1"=1'-0"

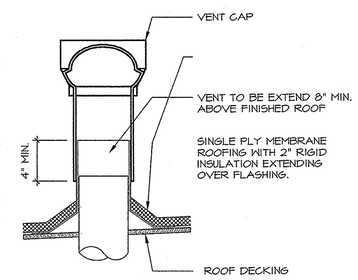

2 VENT PENETRATION — Vent Penetration
SCALE: 1 1/2"=1'-0"

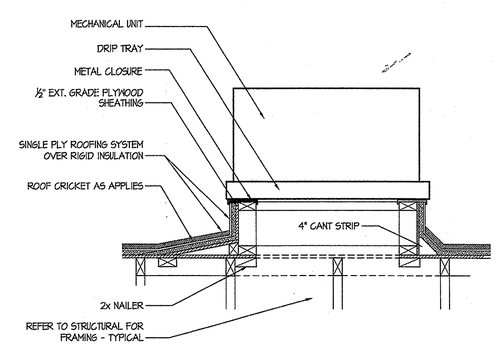

3 — Equipment Curb
SCALE: 3/4"=1'-0"

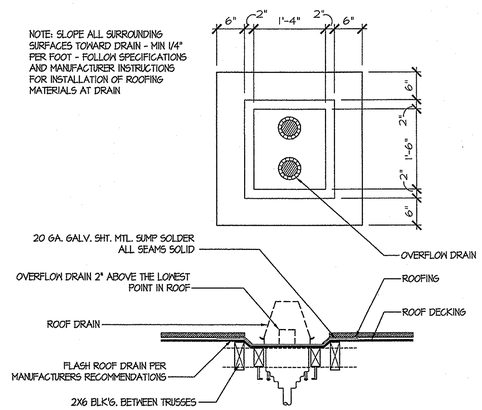

1 — Roof Drain
SCALE: 3/4"=1'-0"

KEYNOTES:

1. ROOF CRICKET -SEE DETAIL 4/A4.0
2. ROOF DRAIN -SEE DETAIL 1/A4.0
3. ROOF FASCIA -SEE WALL SECTION A/A6.1
4. STANDING SEAM METAL ROOF SYSTEM -SEE DETAILS 2 AND 3/A4.1
5. 4" CANT STRIP - SEE DETAIL 5/A4.0
6. ROOF HATCH -SEE DETAIL 5/A4.0
7. DOWN SPOUTS AND BOOT -SEE DETAIL 3/A6.3
8. ROOF DRAIN PIPING SHOWN BELOW ROOF SHEATING - SEE PLUMBING
9. EVAPORATIVE COOLER -SEE MECHANICAL DRAWINGS FOR EXACT LOCATION & EQUIPMENT CURB
10. MECHANICAL UNIT -SEE MECHANICAL DRAWINGS FOR EXACT LOCATIONS & EQUIPMENT CURB
11. PROVIDE CRICKET AS REQUIRED AT EQUIPMENT CURB -SEE DETAIL 3/A4.0
12. METAL CANOPY ALT. BID # 4 -SEE 1/A4.2
13. SINGLE PLY MEMBRANE ROOFING (CSPE/EP) OVER 2" RIGID INSULATION
14. GALVANIZED METAL 5" x 26 GAUGE K GUTTER -SEE DETAIL 1/A4.1 W/ DOWN SPOUT TO LANDSCAPING W/ SPLASH BLOCK
15. 3"x4" 26 GAUGE GALVANIZED DOWN SPOUT W/ SPLASH BLOCK -SEE DETAIL 12/A1.1
16. STANDING SEAM METAL ROOF VENT PENETRATION -SEE DETAIL 7/A4.1
17. STANDING SEAM METAL ROOF PIPE PENETRATION -SEE DETAIL 6/A4.1
18. SINGLE PLY ROOF VENT PENETRATION -SEE DETAIL 2/A4.0
19. SINGLE PLY ROOF PIPE PENETRATION -SEE DETAIL 8/A4.1
20. WALL MOUNTED POLE W/ OWNER PROVIDED ANTENNA AND SIGNAL LIGHT TO BE INSTALL BY CONTRACTOR - SEE DETAIL 9/A4.1
21. EXHAUST FAN - SEE MECHANICAL, STRUCTURAL

HUNT & CARAWAY
Architects, ltd.
7145 North 57th Drive
Glendale, Arizona 85301
Voice (623) 934-4090 Fax (623) 934-4501

Arizona Army National Guard
Silverbell Fire Station No. 361
For
AZ Department of Emergency and Military Affairs

Roof Plan

Revisions:

Drawn by:	T.A.
Checked by:	J.S.
Scale:	As Shown
Date:	08/21/06

REGISTERED ARCHITECT CERTIFICATE NO. 22538 TAMARA D. CARAWAY Date Signed 8-21-06 ARIZONA, U.S.A.

JOB # 06-002

SHEET A4.0

THIS DRAWING & THE DATA CONTAINED HEREIN ARE THE PROPERTY OF HUNT & CARAWAY ARCHITECTS, LTD. AND MAY NOT BE USED, REPRODUCED, COPIED, OR TRANSFERRED WITHOUT THE WRITTEN CONSENT OF THE PROPRIETOR AND/OR COMPANY REPRESENTATIVE, NOR SHALL ANY DATA OR INFORMATION CONTAINED HEREIN BE USED IN PART OR IN FULL FOR ANY PURPOSE OTHER THAN THAT DESCRIBED WITHIN THESE DOCUMENTS.

\\ATTLocalserver\Share\WPROJECTS\2006\06-002-ARIZONA, GUARD FARAN\NATIONAL GUARD FARAN\NATIONAL GUARD FARAN\Sheets\A4.0 Architectural Roof Plan.dwg

THIS DRAWING & THE DATA CONTAINED HEREIN ARE THE PROPERTY OF HUNT & CARAWAY ARCHITECTS, LTD. AND MAY NOT BE USED, REPRODUCED, COPIED, OR TRANSFERRED WITHOUT THE WRITTEN CONSENT OF THE PROPRIETOR AND/OR COMPANY REPRESENTATIVE. NOR SHALL ANY DATA OR INFORMATION CONTAINED HEREIN BE USED IN PART OR IN FULL FOR ANY PURPOSE OTHER THAN THAT DESCRIBED WITHIN THESE DOCUMENTS.
\\OfficeserverServer\PROJECTS\2006\06-002-NATIONAL GUARD MARANA\NATIONAL GUARD MARANA\Sheets\A4.1 Roof Detailing

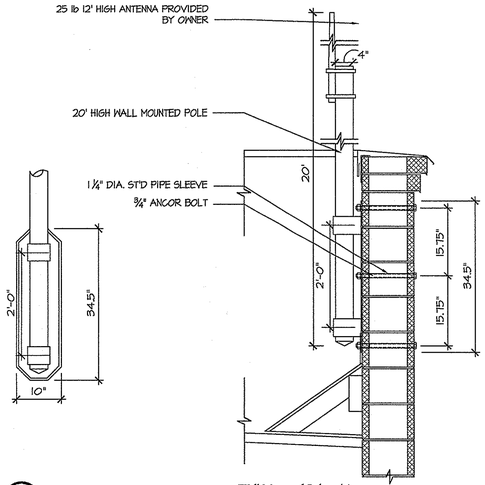

9 Pole w/ Antenna — Wall Mounted Pole w/ Antenna
SCALE: 3/4"=1'-0"

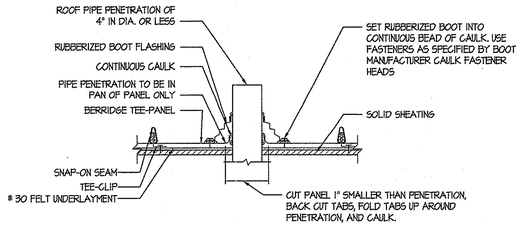

NOTE:
1. REFER TO MANUFACTURER BEFORE USE THIS DETAIL.
2. CUT HOLE TO ALLOW FOR TERMAL MOVEMENT IF PANELS ARE 30'-0" OR LONGER
3. IF PIPE IS MADE OF METAL, IT MUST BE PAINTED TO PREVENT RUST RUN-OFF FROM STAINING PANELS.
4. POSITION SQUARE BASED BOOTS IN A DIAMOND ORIENTATION WHERE IS POSSIBLE

6 — PIPE PENETRATION IN PAN OF PANEL
SCALE: 3"=1'-0"

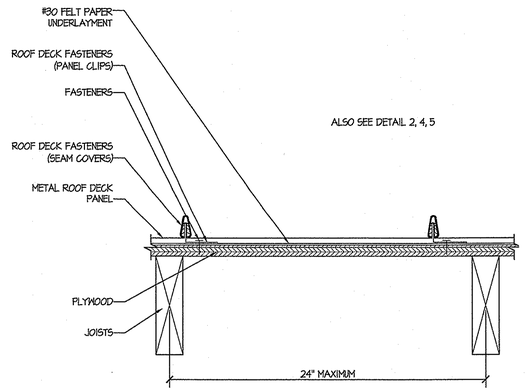

3 — STANDING SEAM PANEL
SCALE: 3"=1'-0"

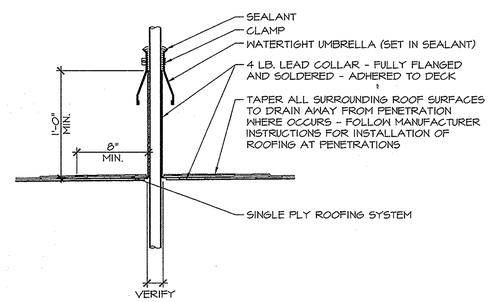

8 — Roof Penetration
SCALE: 1 1/2"=1'-0"

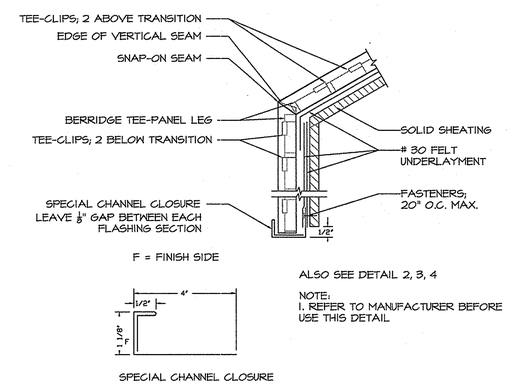

ALSO SEE DETAIL 2, 3, 4

NOTE:
1. REFER TO MANUFACTURER BEFORE USE THIS DETAIL

5 — SLOPE TRANSITION DETAIL ROOF TO FASCIA
SCALE: 3"=1'-0"

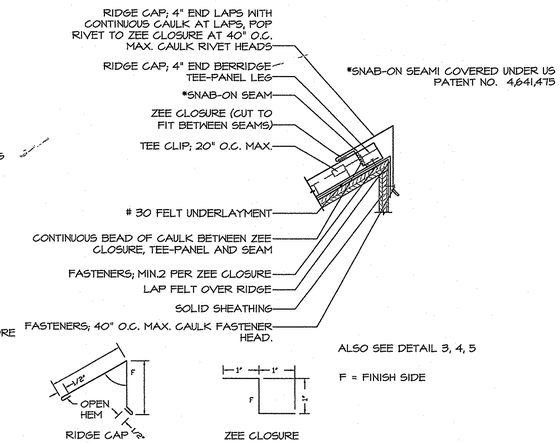

ALSO SEE DETAIL 3, 4, 5

F = FINISH SIDE

2 — ROOF RIDGE CAP DETAIL
SCALE: 3"=1'-0"

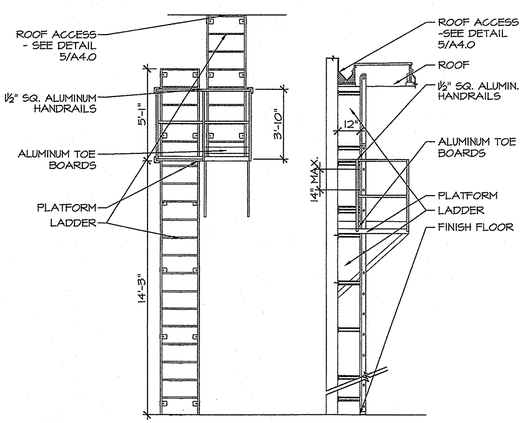

NOTE:
ROOF ACCESS LADDER SHALL MEET OSHA/ANSI STANDARDS. LADDER SHALL BE CERTIFIED AND LABELED BY OSHA/ANSI AS MEETING ALL SAFETY STANDARDS. ALL PRODUCT SUBMITTALS AND SHOP DRAWINGS FOR APPROVAL SHALL MEET OSHA/ANSI DESIGN STANDARDS FOR MANUFACTURERS APPROVED FOR CONSIDERATION SEE PROJECT SPECIFICATION.

10 LADDER W/ PLATFORM — Ladder w/ Platform
SCALE: 1/4"=1'-0"

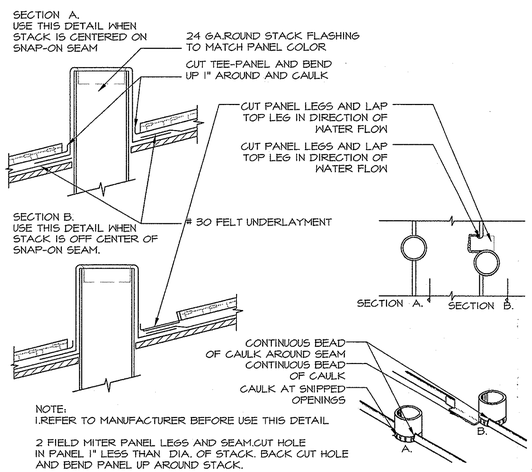

NOTE:
1.REFER TO MANUFACTURER BEFORE USE THIS DETAIL

2 FIELD MITER PANEL LEGS AND SEAM.CUT HOLE IN PANEL 1" LESS THAN DIA. OF STACK. BACK CUT HOLE AND BEND PANEL UP AROUND STACK.

7 VENT PENETRATION — Standing Seam Metal Roof Vent Penetration
SCALE: 1 1/2"=1'-0"

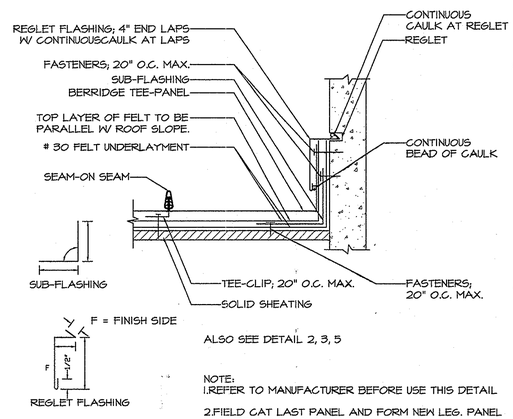

ALSO SEE DETAIL 2, 3, 5

NOTE:
1.REFER TO MANUFACTURER BEFORE USE THIS DETAIL

2.FIELD CAT LAST PANEL AND FORM NEW LEG. PANEL MUST BE CONTINUOUS RIDGE TO EAVE

4 — RAKE WALL DETAIL
SCALE: 3"=1'-0"

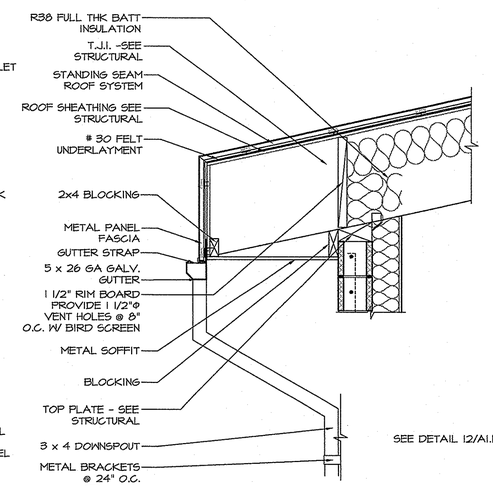

1 — Gutter & Dounspout
SCALE: 3/4"=1'-0"

HUNT & CARAWAY
Architects, ltd.
7145 North 57th Drive
Glendale, Arizona 85301
Voice (623) 934-4090 Fax (623) 934-4501

Arizona Army National Guard
Silverbell Fire Station No. 361
For
AZ Department of Emergency and Military Affairs

Roof Details

Revisions:

Drawn by:	T.A.
Checked by:	J.S.
Scale:	As Shown
Date:	08/21/06

REGISTERED ARCHITECT
CERTIFICATE NO.
22538
TAMARA D. CARAWAY
Date Signed 8-21-06
ARIZONA, U.S.A.

JOB # 06-002

SHEET
A4.1

THIS DRAWING & THE DATA CONTAINED HEREIN ARE THE PROPERTY OF HUNT & CARAWAY ARCHITECTS, LTD. AND MAY NOT BE USED, REPRODUCED, COPIED, OR TRANSFERRED WITHOUT THE WRITTEN CONSENT OF THE PROPRIETOR AND/OR COMPANY REPRESENTATIVE, NOR SHALL ANY DATA OR INFORMATION CONTAINED HEREIN BE USED IN PART OR IN FULL FOR ANY PURPOSE OTHER THAN THAT PRESCRIBED WITHIN THESE DOCUMENTS.
\\Citrixserver\Server\PROJECTS\2006\06-002-NATIONAL GUARD MARANA\NATIONAL GUARD MARANA\Drawings\A4.2 Patio Alternate Bid # 4 & Details.dwg

HUNT & CARAWAY
Architects, ltd.
7145 North 57th Drive
Glendale, Arizona 85301
Voice (623) 934-4090 Fax (623) 934-4501

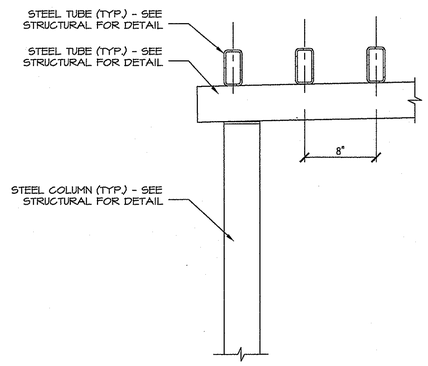

3 CANOPY TO COLUMN — Metal Canopy to Column
SCALE: 1 1/2"=1'0"

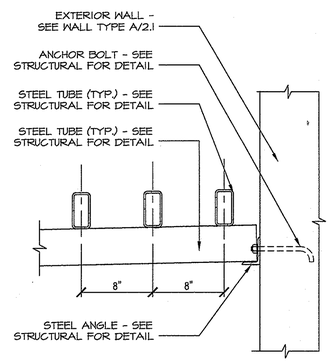

2 CANOPY TO WALL — Metal Canopy to Wall
SCALE: 1 1/2"=1'0"

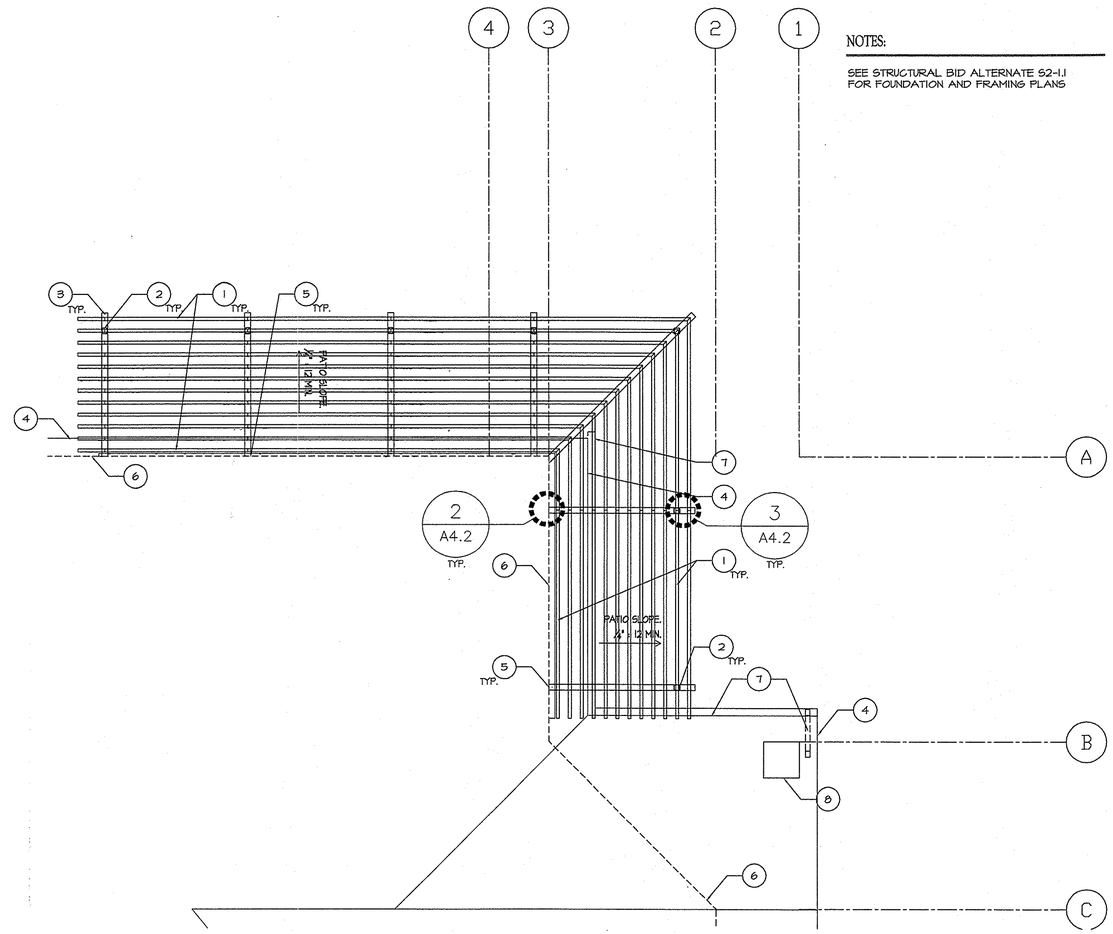

KEYNOTES:

1. 2" x4" STEEL TUBE -SEE STRUCTURAL
2. COLUMN - SEE STRUCTURAL
3. STEEL TUBE - SEE STRUCTURAL
4. ROOF OUTLINE
5. STEEL ANGLE - SEE STRUCTURAL
6. WALL OUTLINE
7. GUTTER - SEE DETAIL 1/A4.1
8. COLUMN - SEE DETAIL 1/A6.3

NOTES:

SEE STRUCTURAL BID ALTERNATE S2-1.1 FOR FOUNDATION AND FRAMING PLANS

Arizona Army National Guard
Silverbell Fire Station No. 361
For
AZ Department of Emergency and Military Affairs

Metal Canopy Alt. Bid # 4 & Details

Revisions:

Drawn by:	T.A.
Checked by:	J.S.
Scale:	As Shown
Date:	08/21/06

REGISTERED ARCHITECT
CERTIFICATE NO.
22538
TAMARA D. CARAWAY
Expires 12/31/07
ARIZONA, U.S.A.

JOB #
06-002

SHEET
A4.2

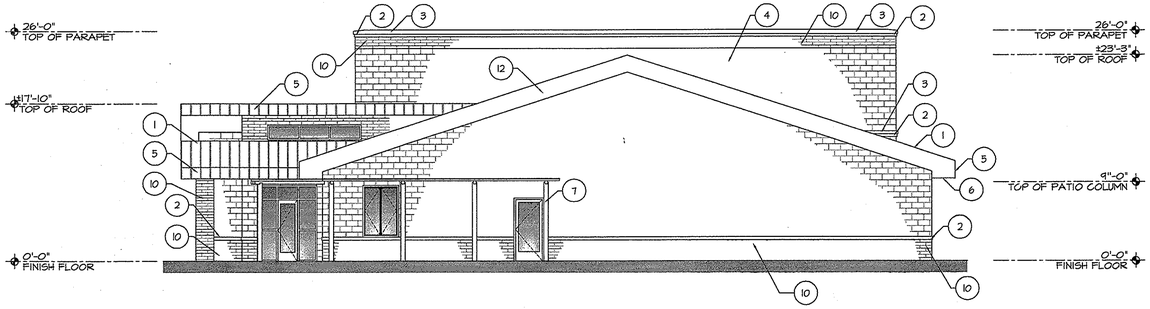

1 North Elevation
1/8" = 1'-0"

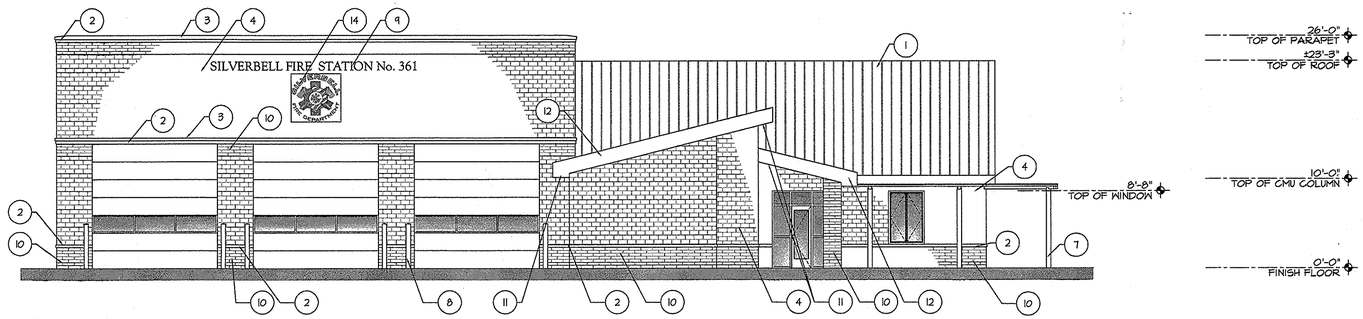

2 East Elevation
1/8" = 1'-0"

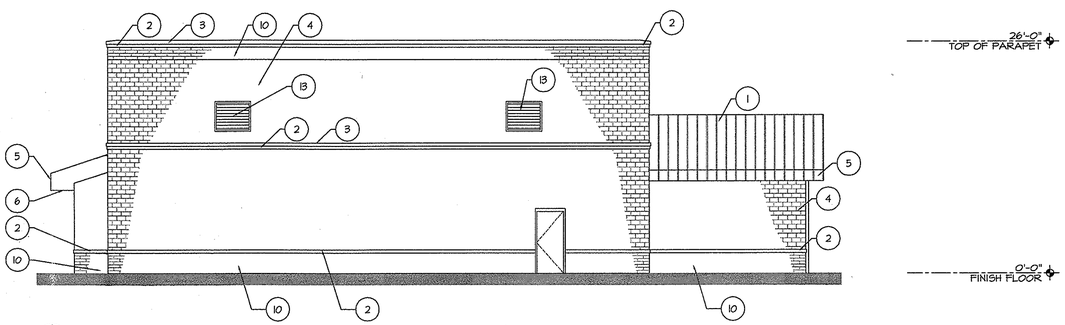

3 South Elevation
1/8" = 1'-0"

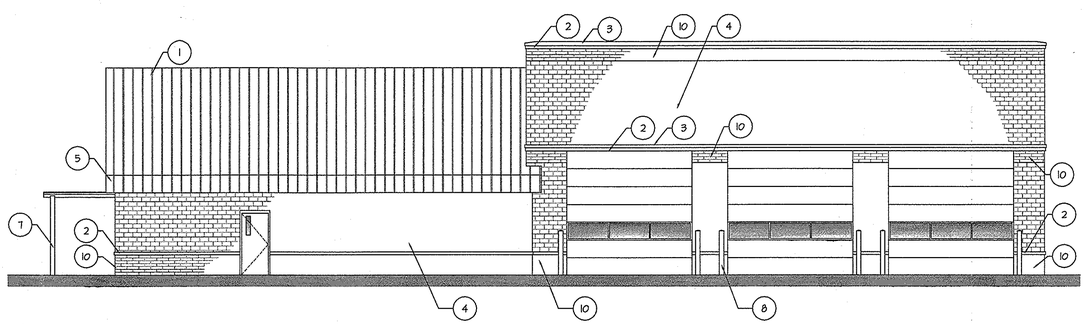

4 West Elevation
1/8" = 1'-0"

KEYNOTES:

1. STANDING SEAM METAL ROOF -SEE SPECIFICATIONS FOR TYPE & COLOR
2. 13"x4"x16" AT BAYS 9"x4"x16" ALL OTHER AREAS OFFSET CELL CMU
3. 14"x4"x16" AT BAYS 10"x4"x16" ALL OTHER AREAS OFFSET CELL CMU
4. 12"x8"x16" CMU AT BAYS 8"x8"x16" ALL OTHER AREAS
5. STANDING SEAM PANEL FASCIA - SEE DETAIL 5/A4.1
6. METAL SOFFIT WITH VENT LOUVERS -SEE DETAIL 2/A6.3
7. METAL COLUMN - SEE STRUCTURAL
8. BOLLARD - SEE DETAIL 1/A1.1
9. 1'-0" ALUMINUM LETTERS -VERIFY W/ OWNER
10. 12"x4"x16" SPLIT FACE CMU
11. METAL SOFFIT (TYP.) - SEE DETAIL 6/A6.3
12. METAL FASCIA - SEE DETAIL 7/A6.3
13. RELIEF LOUVER 48" WIDE x 40" HIGH AT +16' AFF - SEE MECHANICAL
14. FIRE DEPARTMENT LOGO -VERIFY W/ OWNER

HUNT & CARAWAY
Architects, ltd.

7145 North 57th Drive
Glendale, Arizona 85301
Voice (623) 934-4090 Fax (623) 934-4501

Arizona Army National Guard
Silverbell Fire Station No. 361
For
AZ Department of Emergency and Military Affairs

Exterior Elevations

Revisions:

Drawn by:	T.A.
Checked by:	J.S.
Scale:	As Shown
Date:	08/21/06

REGISTERED ARCHITECT
CERTIFICATE NO.
22538
TAMARA D.
CARAWAY
Date Signed 8-21-06
ARIZONA, U.S.A.

JOB #
06-002

SHEET
A5.0

THIS DRAWING & THE DATA CONTAINED HEREIN ARE THE PROPERTY OF HUNT & CARAWAY ARCHITECTS, LTD. AND MAY NOT BE USED, REPRODUCED, COPIED, OR TRANSFERRED WITHOUT THE WRITTEN CONSENT OF THE PROPRIETOR AND/OR COMPANY REPRESENTATIVE, NOR SHALL ANY DATA OR INFORMATION CONTAINED HEREIN BE USED IN PART OR IN FULL FOR ANY PURPOSE OTHER THAN THAT DESCRIBED WITHIN THESE DOCUMENTS.
\\OfficeserverServer\PROJECTS\2006\06-002-NATIONAL GUARD MARANA\NATIONAL GUARD MARANA\Sheets\A5.0 Exterior Elevations.dwg

THIS DRAWING & THE DATA CONTAINED HEREIN ARE THE PROPERTY OF HUNT & CARAWAY ARCHITECTS, LTD. AND MAY NOT BE USED, REPRODUCED, COPIED, OR TRANSFERRED WITHOUT THE WRITTEN CONSENT OF THE PROPRIETOR AND/OR COMPANY REPRESENTATIVE. NOR SHALL ANY DATA OR INFORMATION CONTAINED HEREIN BE USED IN PART OR IN FULL FOR ANY PURPOSE OTHER THAN THAT DESCRIBED WITHIN THESE DOCUMENTS.
\\office\server\server\PROJECTS\2006\06-002-NATIONAL GUARD MARANA\NATIONAL GUARD MARANA\Sheets\A6.0 Building Sections.dwg

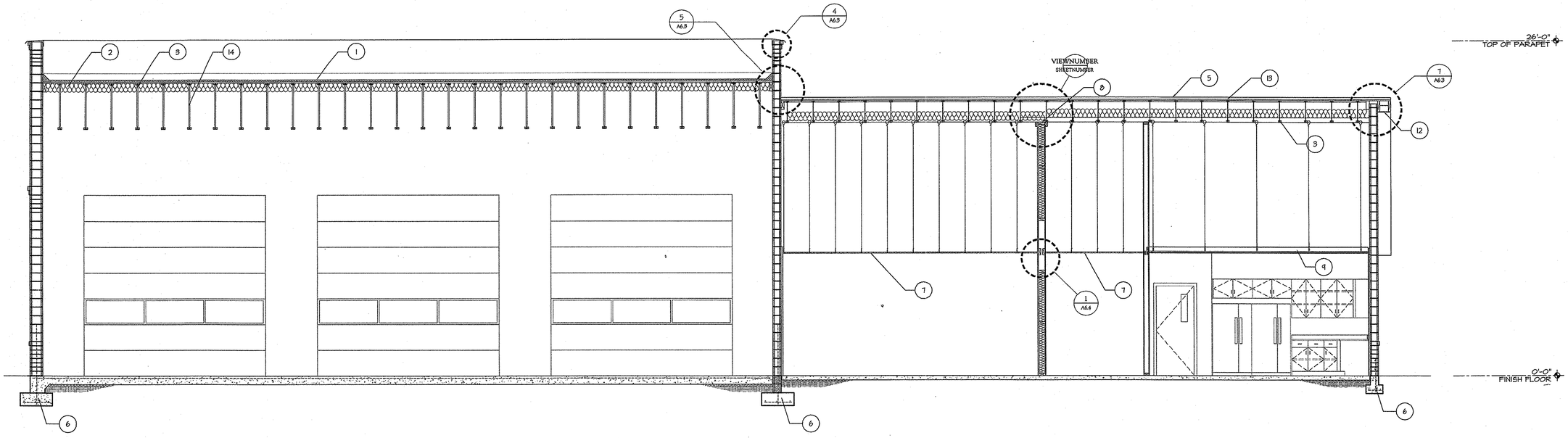

2 Building Section
1/4" = 1'0"

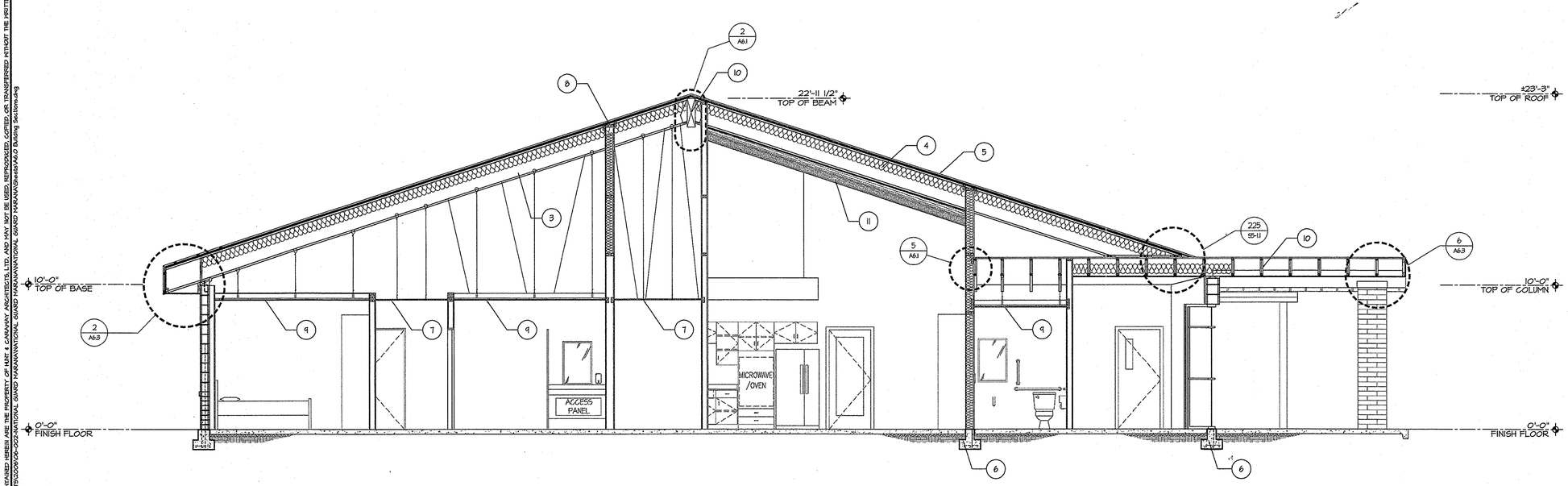

1 Building Section
1/4" = 1'0"

KEYNOTES:

1. INSTALL SINGLE PLY ELASTOMERIC ROOFING SYSTEM W/ 2" RIGID INSULATION OVER ⅝" ROOF SHEATING - SEE STRUCTURAL
2. ALT. BID #7 - R-38 VINYL FACED BATT INSULATION
3. T.J.I. - SEE STRUCTURAL
4. R-38 BATT INSULATION
5. STANDING SEAM METAL ROOF, OVER 2 LAYERS OF #30 FELT PAPER, OVER ROOF SHEATHING - SEE WALL SECTION "A" /A6.3
6. FOOTING - SEE STRUCTURAL
7. ACOUSTICAL SUSPENDED CEILING - SEE REFLECTED CEILING PLAN - SHEET A3.0
8. PROVIDE BLOCKING IN WALL AT TOP OF WALL - TYP.
9. G.W.B. CEILING, WATER RESISTANT WHERE OCCURS, PROVIDE SUPPORTS FOR G.W.B. AT 16 O.C.
10. RIDGE GLUE LAMINATED BEAM - SEE STRUCTURAL
11. 6'x8' ARCHITECTURAL GRADE BEAM AT 6'-0" O.C. - SEE DETAIL 3/A3.1
12. METAL SOFFIT W/ VENT.
13. ⅝" PLYWOOD SHEATHING
14. T.J.L. - SEE STRUCTURAL
15. CRICKET - SEE DETAIL 4/A4.0
16. SECTIONAL DOOR - SEE SPEC.
17. METAL CANOPY - SEE SHEET A4.2 FOR ALTERNATE BID #4
18. HIGH INTERIOR WINDOW - SEE INTERIOR ELEVATION F/A7.1
19. HIGH EXTERIOR WINDOW - SEE WINDOW SCHEDULE

HUNT & CARAWAY
Architects, ltd.
7145 North 57th Drive
Glendale, Arizona 85301
Voice (623) 934-4090 Fax (623) 934-4501

Arizona Army National Guard
Silverbell Fire Station No. 361
For
AZ Department of Emergency and Military Affairs

Building Sections

Revisions:

Drawn by:	T.A.
Checked by:	J.S.
Scale:	As Shown
Date:	08/21/06

REGISTERED ARCHITECT
CERTIFICATE NO.
22538
TAMARA D.
CARAWAY
Signature
ARIZONA, U.S.A.

JOB #
06-002

SHEET
A6.0

THIS DRAWING & THE DATA CONTAINED HEREIN ARE THE PROPERTY OF HUNT & CARAWAY ARCHITECTS, LTD. AND MAY NOT BE USED, REPRODUCED, COPIED, OR TRANSFERRED WITHOUT THE WRITTEN CONSENT OF THE PROPRIETOR AND/OR COMPANY REPRESENTATIVE, NOR SHALL ANY DATA OR INFORMATION CONTAINED HEREIN BE USED IN PART OR IN FULL FOR ANY PURPOSE OTHER THAN THAT DESCRIBED WITHIN THESE DOCUMENTS.
\\Officeserver\Server\PROJECTS\2006\06-002-NATIONAL GUARD MARANA\NATIONAL GUARD MARANA\Drawings\A6.1 Building Sections.dwg

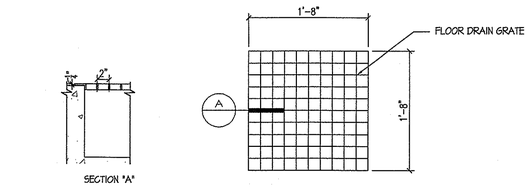

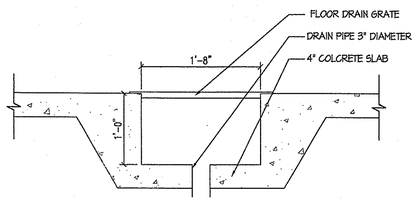

6 FLOOR DRAIN — **Floor Drain** — SCALE: 1"=1'-0"

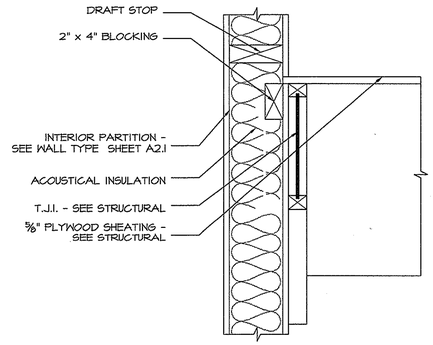

5 T.J.I. TO PARTITION — **T.J.I. to Interior Partition** — SCALE: 1 1/2"=1'-0"

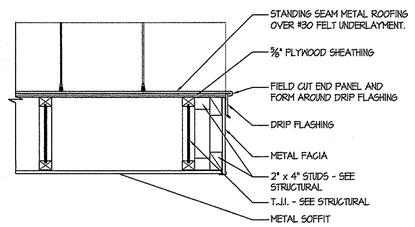

4 METAL SOFFIT — **Metal Soffit** — SCALE: 1"=1'-0"

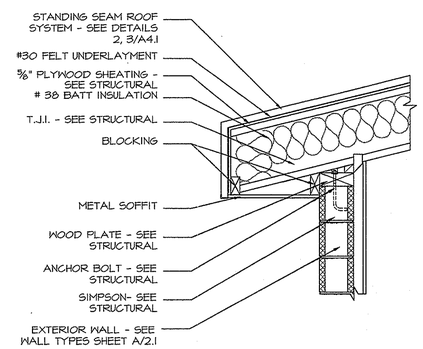

3 FASCIA — **Fascia** — SCALE: 3/4"=1'-0"

KEYNOTES:

1. INSTALL SINGLE PLY ELASTOMERIC ROOFING SYSTEM W/ 2" RIGID INSULATION OVER ⅝" ROOF SHEATING - SEE STRUCTURAL
2. ALT. BID #1 - R-38 VINYL FACED BATT INSULATION
3. T.J.I. - SEE STRUCTURAL
4. R-38 BATT INSULATION
5. STANDING SEAM METAL ROOF, OVER 2 LAYERS OF #30 FELT PAPER, OVER ROOF SHEATHING - SEE WALL SECTION "A" /A6.3
6. FOOTING - SEE STRUCTURAL
7. ACOUSTICAL SUSPENDED CEILING - SEE REFLECTED CEILING PLAN - SHEET A3.0
8. PROVIDE BLOCKING IN WALL AT TOP OF WALL - TYP.
9. G.W.B. CEILING, WATER RESISTANT WHERE OCCURS, PROVIDE SUPPORTS FOR G.W.B. AT 16 O.C.
10. RIDGE GLUE LAMINATED BEAM - SEE STRUCTURAL
11. 6"x8" ARCHITECTURAL GRADE BEAM AT 6'-0" O.C. - SEE DETAIL 3/A3.1
12. METAL SOFFIT W/ VENT.
13. ⅝" PLYWOOD SHEATHING
14. T.J.I. - SEE STRUCTURAL
15. CRICKET - SEE DETAIL 4/A4.0
16. SECTIONAL DOOR - SEE SPEC.
17. METAL CANOPY - SEE SHEET A4.2 FOR ALTERNATE BID #4
18. HIGH INTERIOR WINDOW - SEE INTERIOR ELEVATION F/A7.1
19. HIGH EXTERIOR WINDOW - SEE WINDOW SCHEDULE

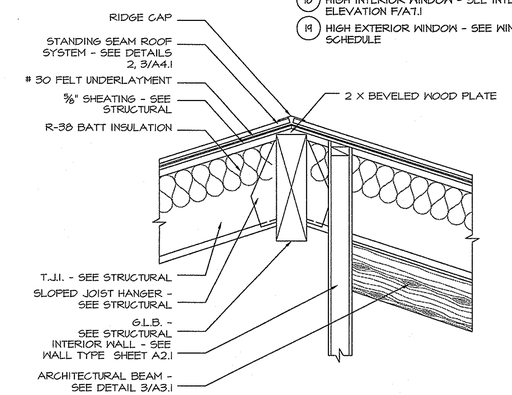

2 WOOD JOIST TO GABLE — **Wood Joist to Gable** — SCALE: 3/4"=1'-0"

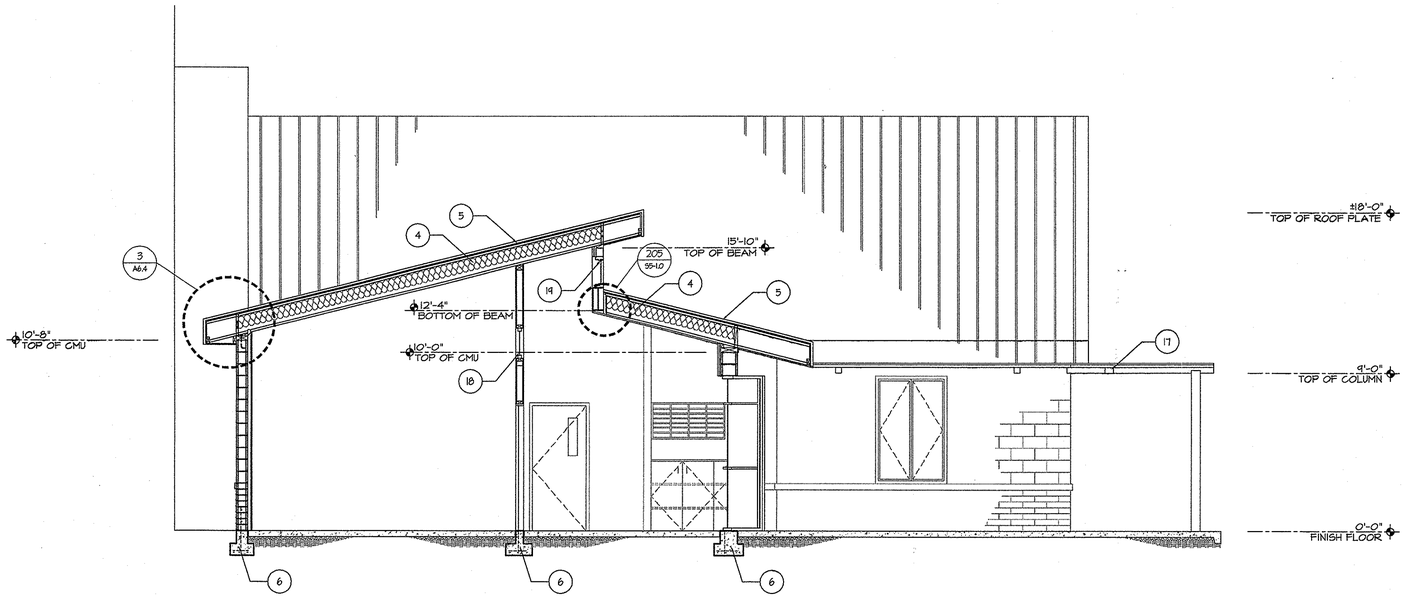

3 **Building Section** 1/4" = 1'-0"

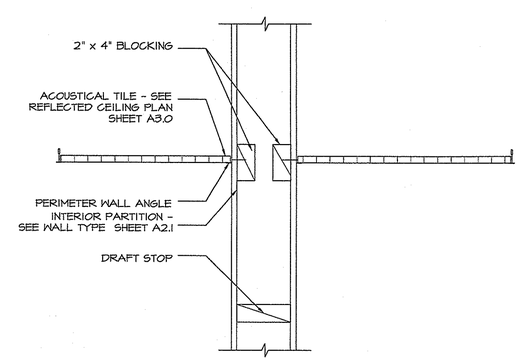

1 CEILING TO PARTITION — **Ceiling to Interior Partition** — SCALE: 1 1/2"=1'-0"

HUNT & CARAWAY
Architects, ltd.
7145 North 57th Drive
Glendale, Arizona 85301
Voice (623) 934-4090 Fax (623) 934-4501

Arizona Army National Guard
Silverbell Fire Station No. 361
For
AZ Department of Emergency and Military Affairs

Building Sections & Details

Revisions:

Drawn by:	T.A.
Checked by:	J.S.
Scale:	As Shown
Date:	08/21/06

REGISTERED ARCHITECT CERTIFICATE NO. 22538 TAMARA D. CARAWAY Date Signed 8-21-06 ARIZONA, U.S.A.

JOB # 06002

SHEET A6.1

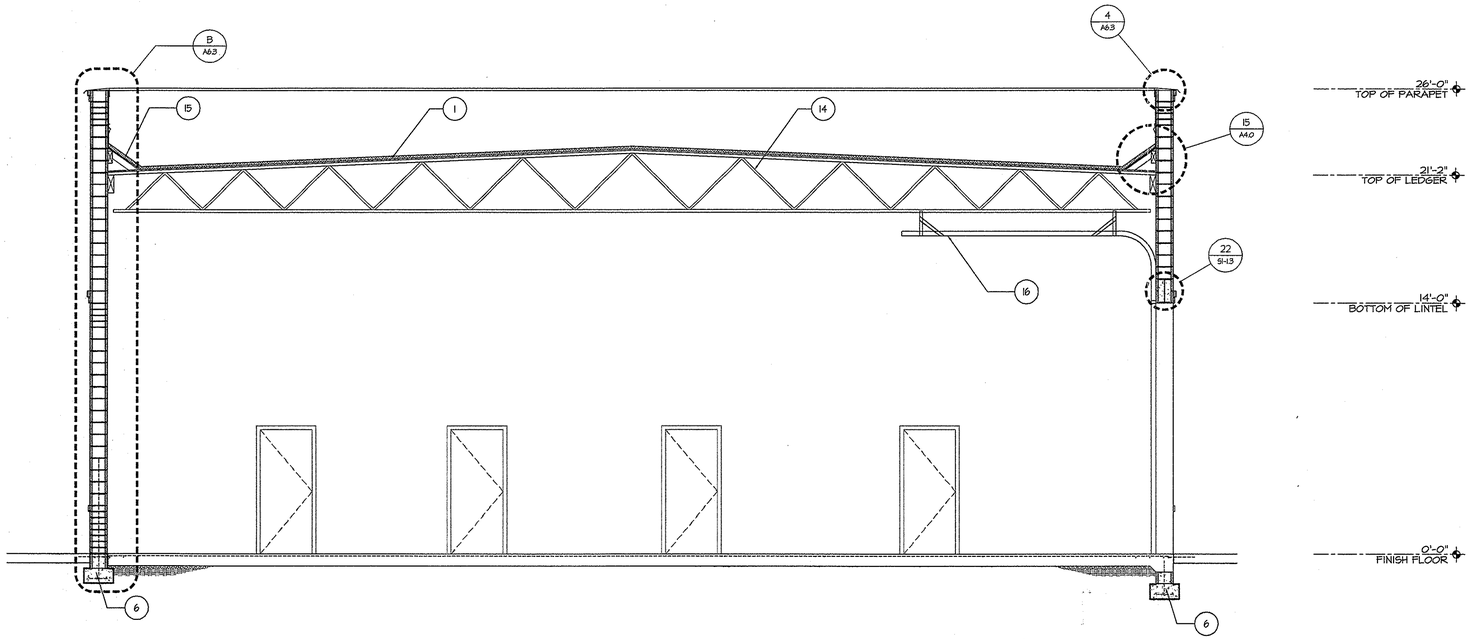

5 Building Section
1/4" = 1'0"

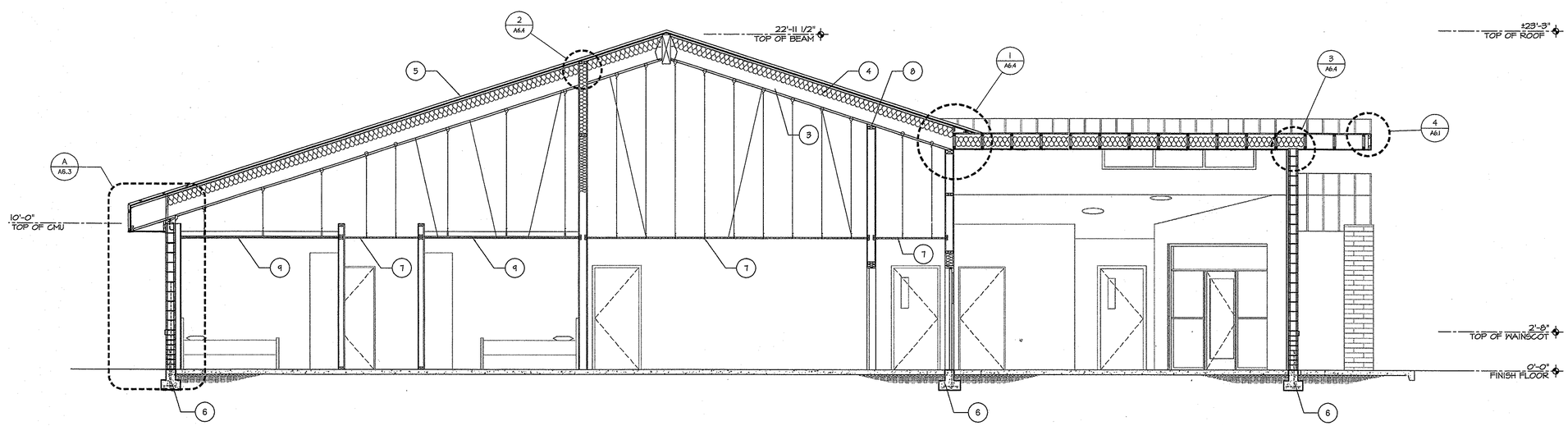

4 Building Sections
1/4" = 1'0"

KEYNOTES:

1. INSTALL SINGLE PLY ELASTOMERIC ROOFING SYSTEM W/ 2" RIGID INSULATION OVER ⅝" ROOF SHEATING - SEE STRUCTURAL
2. ALT. BID #7 - R-38 VINYL FACED BATT INSULATION
3. T.J.I. - SEE STRUCTURAL
4. R-38 BATT INSULATION
5. STANDING SEAM METAL ROOF, OVER 2 LAYERS OF #30 FELT PAPER, OVER ROOF SHEATHING - SEE WALL SECTION "A" /A6.3
6. FOOTING - SEE STRUCTURAL
7. ACOUSTICAL SUSPENDED CEILING - SEE REFLECTED CEILING PLAN - SHEET A3.0
8. PROVIDE BLOCKING IN WALL AT TOP OF WALL - TYP.
9. G.W.B. CEILING, WATER RESISTANT WHERE OCCURS, PROVIDE SUPPORTS FOR G.W.B. AT 16 O.C.
10. RIDGE GLUE LAMINATED BEAM - SEE STRUCTURAL
11. 6'x8' ARCHITECTURAL GRADE BEAM AT 6'-0" O.C. - SEE DETAIL 3/A3.1
12. METAL SOFFIT W/ VENT.
13. ⅝" PLYWOOD SHEATHING
14. T.J.L. - SEE STRUCTURAL
15. CRICKET - SEE DETAIL 4/A4.0
16. SECTIONAL DOOR - SEE SPEC.
17. METAL CANOPY - SEE SHEET A4.2 FOR ALTERNATE BID #4
18. HIGH INTERIOR WINDOW - SEE INTERIOR ELEVATION F/A7.1
19. HIGH EXTERIOR WINDOW - SEE WINDOW SCHEDULE

HUNT & CARAWAY
Architects, ltd.
7145 North 57th Drive
Glendale, Arizona 85301
Voice (623) 934-4090 Fax (623) 934-4501

Arizona Army National Guard
Silverbell Fire Station No. 361
For
AZ Department of Emergency and Military Affairs

Building Sections

Revisions:

Drawn by:	T.A.
Checked by:	J.S.
Scale:	As Shown
Date:	08/21/06

REGISTERED ARCHITECT
CERTIFICATE NO.
22538
TAMARA D.
CARAWAY
Date Signed 8-21-06
ARIZONA, U.S.A.

JOB #
06-002

SHEET
A6.2

THIS DRAWING & THE DATA CONTAINED HEREIN ARE THE PROPERTY OF HUNT & CARAWAY ARCHITECTS, LTD. AND MAY NOT BE USED, REPRODUCED, COPIED, OR TRANSFERRED WITHOUT THE WRITTEN CONSENT OF THE PROPRIETOR AND/OR COMPANY REPRESENTATIVE. NOR SHALL ANY DATA OR INFORMATION CONTAINED HEREIN BE USED IN PART, OR IN FULL, FOR ANY PURPOSE OTHER THAN THAT PRESCRIBED WITHIN THESE DOCUMENTS.
\\Officeserver\server\PROJECTS\2006\06-002-NATIONAL GUARD MARANA\NATIONAL GUARD MARANA\Sheets\A6.2 Building Sections.dwg

THIS DRAWING & THE DATA CONTAINED HEREIN ARE THE PROPERTY OF HUNT & CARAWAY ARCHITECTS, LTD. AND MAY NOT BE USED, REPRODUCED, COPIED, OR TRANSFERRED WITHOUT THE WRITTEN CONSENT OF THE PROPRIETOR, AND/OR COMPANY REPRESENTATIVE, NOR SHALL ANY DATA, OR INFORMATION CONTAINED HEREIN BE USED IN PART OR IN FULL FOR ANY PURPOSE OTHER THAN THAT DESCRIBED WITHIN THESE DOCUMENTS.
\\altfileserver\server\PROJECTS\2006\06-002-NATIONAL GUARD MARANA\NATIONAL GUARD MARANA\Sheets\A6.3 Wall Section & Details.dwg

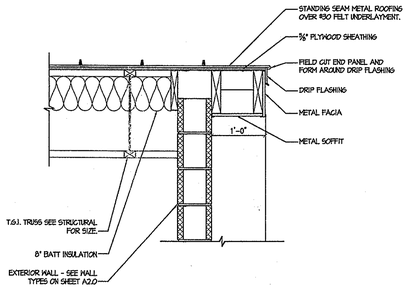

7 ROOF SOFFIT — Metal Soffit
SCALE: 1"=1'-0"

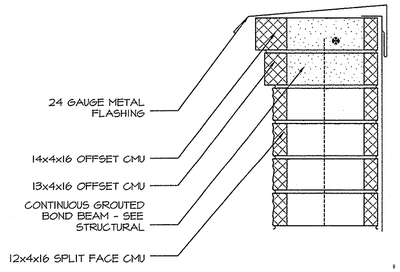

4 TOP OF PARAPET — Top of Parapet
SCALE: 1 1/2"=1'-0"

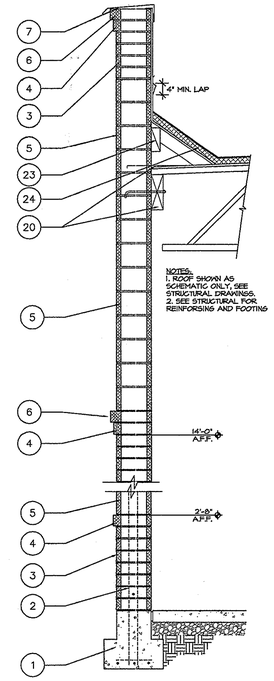

B TYPICAL WALL SECTION — TYPICAL WALL SECTION
SCALE: 1/2"=1'-0"

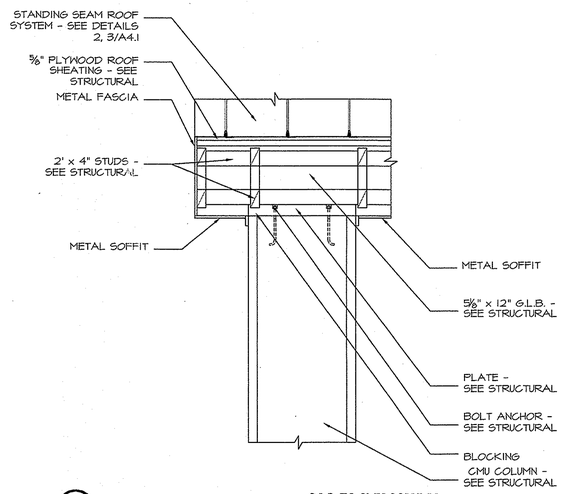

6 G.L.B. TO CMU COLUMN — G.L.B. TO CMU COLUMN
SCALE: 3/4"=1'-0"

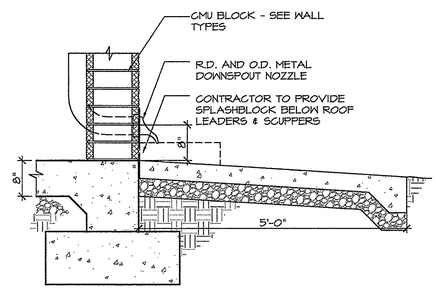

REFER TO STRUCTURAL FOR WALL & FOOTING REINFORING AND GROUTING - TYP.

FOR SPLASHBLOCK SEE DETAIL 12/A1.1

3 Downspout Nozzle
SCALE: 3/4"=1'-0"

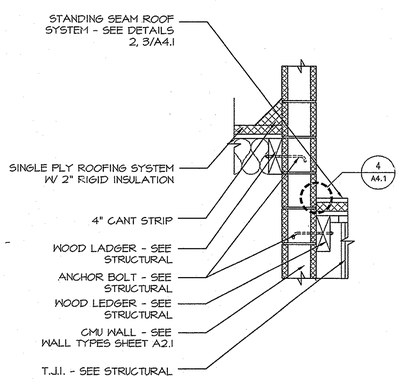

WOOD LEDGER TO CMU WALL
SCALE: 3/4"=1'-0"

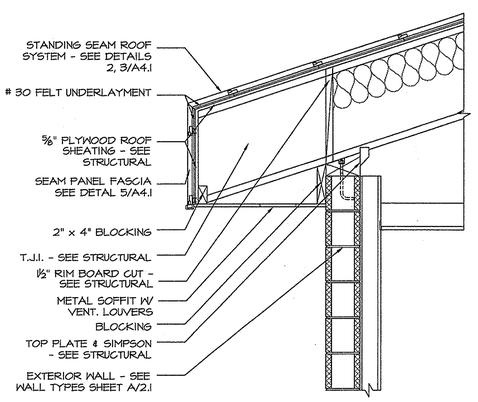

2 FASCIA & SOFFIT — Fascia & Soffit
SCALE: 3/4"=1'-0"

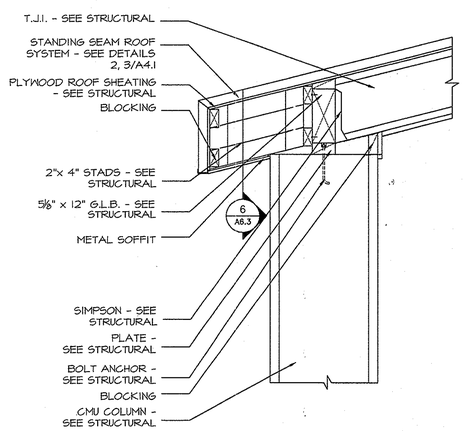

1 G.L.B. TO CMU COLUMN — G.L.B. TO CMU COLUMN
SCALE: 3/4"=1'-0"

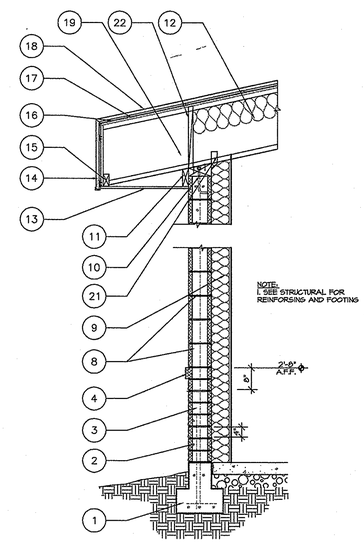

A TYPICAL WALL SECTION — TYPICAL WALL SECTION
SCALE: 1/2"=1'-0"

KEYNOTES:

1. FOOTING - SEE STRUCTURAL
2. WALL REINFORCING - SEE STRUCTURAL
3. 12x4x16 SLIT FACE CMU
4. 13x4x16 COMMON CMU
5. 12x8x16 COMMON CMU
6. 14x4x16 COMMON CMU
7. TOP OF PARAPET - SEE DETAIL 4/A6.3
8. 8x8x16 COMMON CMU
9. ACOUSTICAL INSULATION - REFER TO WALL TYPES FOR FURRING REQUIREMENTS
10. TOP PLATE W/ ANCOR BOLT - SEE STRUCTURAL
11. BLOCKING
12. R38 FULL TNK BATT INSULATION
13. METAL SOFFIT W/ VENT. PANELS
14. METAL PANEL FASCIA
15. 2x4 BLOCKING
16. (2) #30 FELT UNDERLAYMENT
17. 5/8" PLYWOOD ROOF SHEATHING - SEE STRUCTURAL
18. STANDING SEAM ROOF SYSTEM - SEE DETAILS 2; 3/A4.1
19. T.J.I. - SEE STRUCTURAL
20. WEB JOIST AT CMU WALL- SEE STRUCTURAL FOR CONNECTION, SIZE AND TYPE
21. SIMPSON - SEE STRUCTURAL
22. RIM BOARD CUT W/ VENT HALLS - SEE STRUCTURAL
23. 2"x4" BLOCKING
24. 2" RIGID INSULATION WITH SINGLE PLY ROOFING.

HUNT & CARAWAY
Architects, ltd.
7145 North 57th Drive
Glendale, Arizona 85301
Voice (623) 934-4090 Fax (623) 934-4501

Arizona Army National Guard
Silverbell Fire Station No. 361
For
AZ Department of Emergency and Military Affairs

Wall Section & Details

Revisions:

Drawn by:	T.A.
Checked by:	J.S.
Scale:	As Shown
Date:	08/21/06

REGISTERED ARCHITECT
CERTIFICATE NO. 22538
TAMARA D. CARAWAY
Date Signed 8-23-06
ARIZONA, U.S.A.

JOB # 06-002

SHEET
A6.3

THIS DRAWING & THE DATA CONTAINED HEREIN ARE THE PROPERTY OF HUNT & CARAWAY ARCHITECTS, LTD. AND MAY NOT BE USED, REPRODUCED, COPIED, OR TRANSFERRED WITHOUT THE WRITTEN CONSENT OF THE PROPRIETOR AND/OR COMPANY REPRESENTATIVE. NOR SHALL ANY DATA OR INFORMATION CONTAINED HEREIN BE USED IN PART OR IN FULL FOR ANY PURPOSE OTHER THAN THAT DESCRIBED WITHIN THESE DOCUMENTS.
\\Officeserver\Server\PROJECTS\2006\06-002-NATIONAL GUARD MARANA\NATIONAL GUARD MARANA\Sheets\A6.4 Section Details.dwg

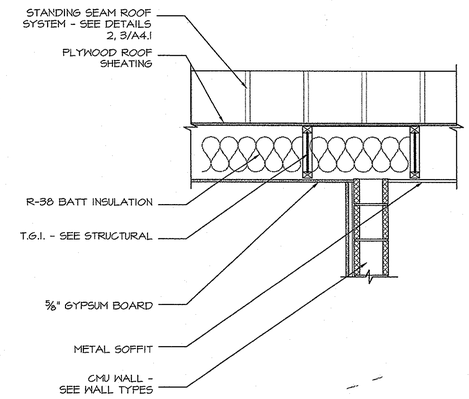

3 WOOD I JOIST TO CMU — Wood I Joist to CMU
SCALE: 3/4"=1'-0"

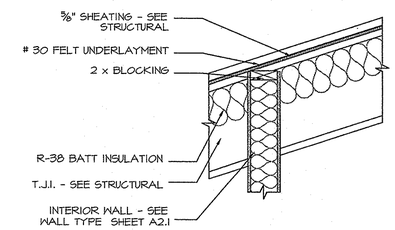

2 PARTITION TO SHEATING — Partition to Sheating
SCALE: 3/4"=1'-0"

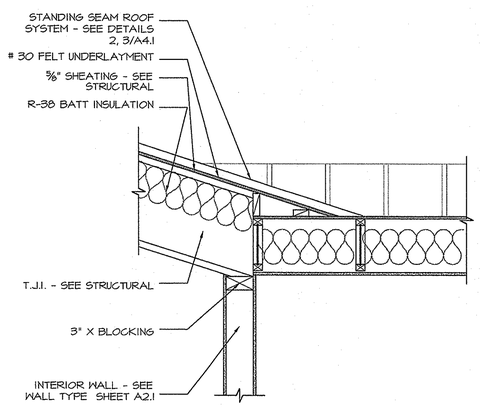

1 WOOD I JOIST TO STEEL STUD WALL — Wood I Joist to Steel Stud Wall
SCALE: 3/4"=1'-0"

HUNT & CARAWAY
Architects, ltd.
7145 North 57th Drive
Glendale, Arizona 85301
Voice (623) 934-4090 Fax (623) 934-4501

Arizona Army National Guard
Silverbell Fire Station No. 361
For
AZ Department of Emergency and Military Affairs

Section Details

Revisions:

Drawn by:	T.A.
Checked by:	J.S.
Scale:	As Shown
Date:	08/21/06

REGISTERED ARCHITECT
CERTIFICATE NO.
22538
TAMARA D. CARAWAY
Date Signed 8-21-06
ARIZONA, U.S.A.

JOB #
06-002

SHEET
A6.4

THIS DRAWING & THE DATA CONTAINED HEREIN ARE THE PROPERTY OF HUNT & CARAWAY ARCHITECTS, LTD. AND MAY NOT BE USED, REPRODUCED, COPIED, OR TRANSFERRED WITHOUT THE WRITTEN CONSENT OF THE PROPRIETOR AND/OR COMPANY REPRESENTATIVE. NOR SHALL ANY DATA OR INFORMATION CONTAINED HEREIN BE USED IN PART OR IN FULL FOR ANY PURPOSE OTHER THAN THAT DESCRIBED WITHIN THESE DOCUMENTS.
\\Officeserver\server\PROJECTS\2006\06-002-NATIONAL GUARD MARANA\NATIONAL GUARD MARANA\drawings\A7.0 Enlarged Plans & Interior Elevations.dwg

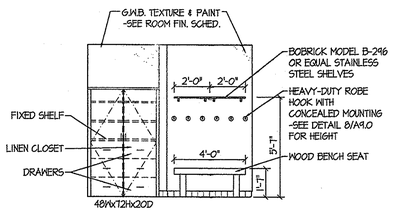

B INTERIOR ELEVATION — SHOWER 119 — SCALE: 1/4" = 1'0"

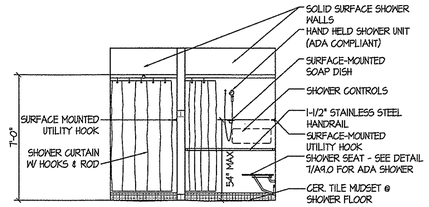

A INTERIOR ELEVATION — SHOWER 119 — SCALE: 1/4" = 1'0"

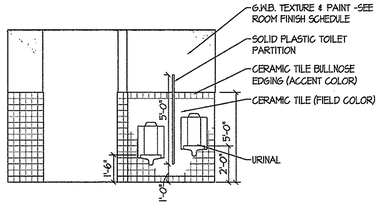

B INTERIOR ELEVATION — MEN'S RESTROOM 118 — SCALE: 1/4" = 1'0"

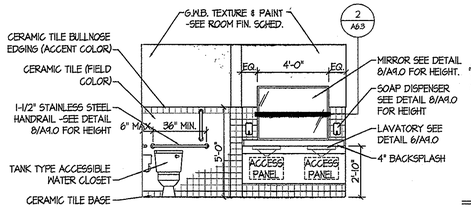

A INTERIOR ELEVATION — MEN'S RESTROOM 118 — SCALE: 1/4" = 1'0"

NOTE:
1. FOR EQUIPMENT TYPE AND LOCATION SEE DETAIL 8/A9.0
2. TILE IS TO STOP AT EDGE OF EQUIPMENT, SUCH AS MIRRORS, URINALS, TRASH RECEPTICALS, AND CABINETS.
3. W.R. G.W.B. TO BE USED IN RESTROOMS, JANITOR CLOSETS, BIO-HAZARD, AND AREAS WITH WATER PROTECTION FINISH.

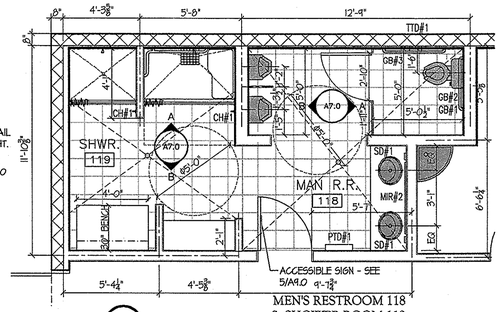

4 ENLARGED PLAN — MEN'S RESTROOM 118 & SHOWER ROOM 119 — SCALE: 1/4" = 1'0"

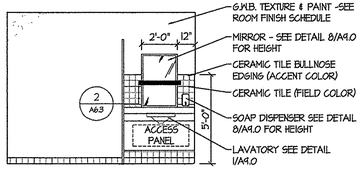

C INTERIOR ELEVATION — WOMAN'S RESTROOM 111 — SCALE: 1/4" = 1'0"

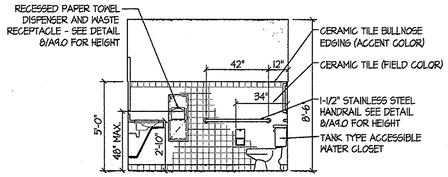

B INTERIOR ELEVATION — WOMAN'S RESTROOM 111 — SCALE: 1/4" = 1'0"

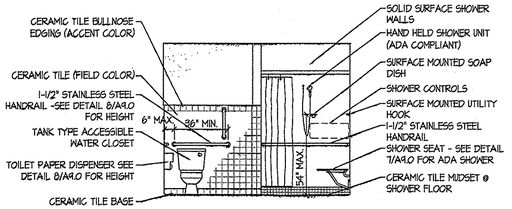

A INTERIOR ELEVATION — WOMAN'S RESTROOM 111 — SCALE: 1/4" = 1'0"

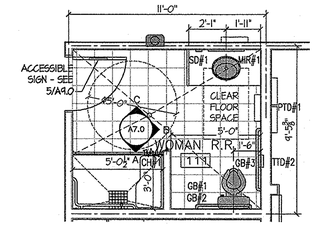

3 ENLARGED PLAN — WOMAN'S RESTROOM 111 — SCALE: 1/4" = 1'0"

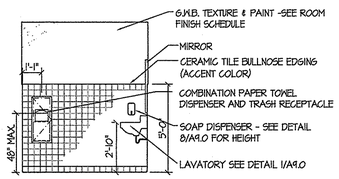

C INTERIOR ELEVATION — RESTROOM 105 — SCALE: 1/4" = 1'0"

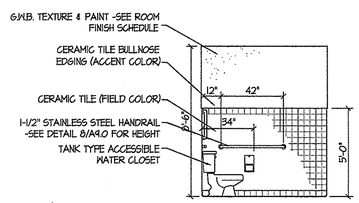

B INTERIOR ELEVATION — RESTROOM 105 — SCALE: 1/4" = 1'0"

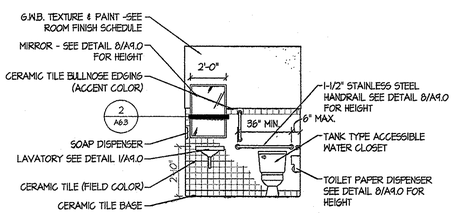

A INTERIOR ELEVATION — RESTROOM 105 — SCALE: 1/4" = 1'0"

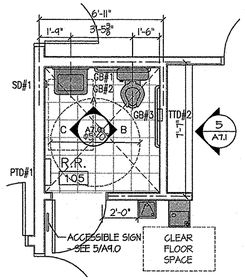

2 ENLARGED PLAN — RESTROOM 105 — SCALE: 1/4" = 1'0"

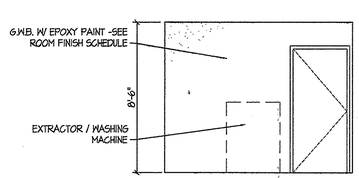

B INTERIOR ELEVATION — BIOHAZARD 109 — SCALE: 1/4" = 1'0"

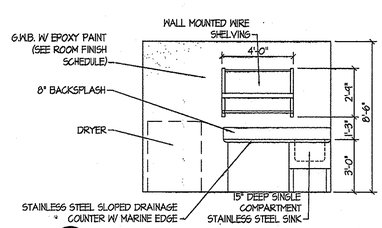

A INTERIOR ELEVATION — BIOHAZARD 109 — SCALE: 1/4" = 1'0"

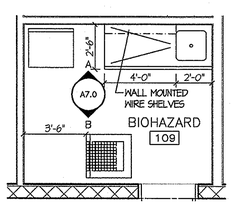

1 ENLARGED PLAN — BIOHAZARD ROOM 109 — SCALE: 1/4" = 1'0"

HUNT & CARAWAY
Architects, ltd.
7145 North 57th Drive
Glendale, Arizona 85301
Voice (623) 934-4090 Fax (623) 934-4501

Arizona Army National Guard
Silverbell Fire Station No. 361
For
AZ Department of Emergency and Military Affairs

Enlarged Plans & Interior Elevations

Revisions:

Drawn by:	T.A.
Checked by:	J.S.
Scale:	As Shown
Date:	08/21/06

REGISTERED ARCHITECT CERTIFICATE NO. 22538 TAMARA D. CARAWAY Registered ARIZONA, U.S.A.

JOB # 06-002

SHEET A7.0

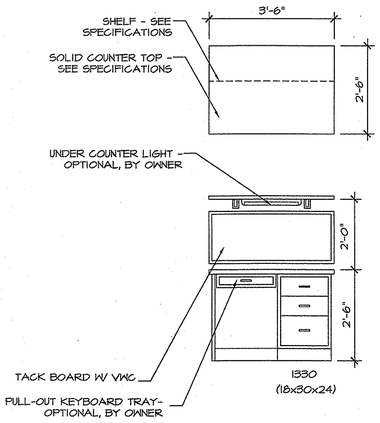

6 DESK — Desk
SCALE: 1/2"=1'-0"

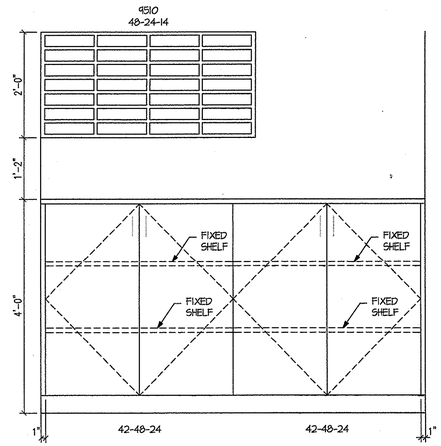

5 INTERIOR LOBBY STORAGE — Typical Interior Storage for Lobby
SCALE: 3/4"=1'-0"

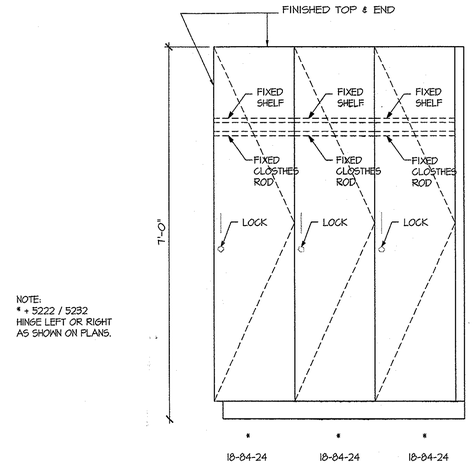

4 LOCKERS — Lockers @ Room
SCALE: 3/4"=1'-0"

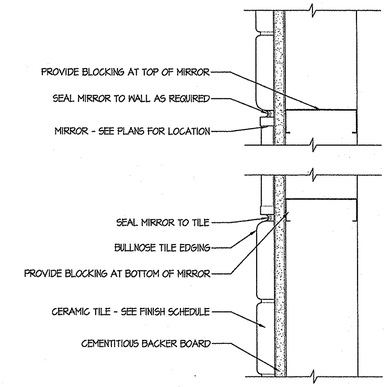

3 TILE TO MIRROR — TILE TO MIRROR PLAN
SCALE: 3"=1'-0"

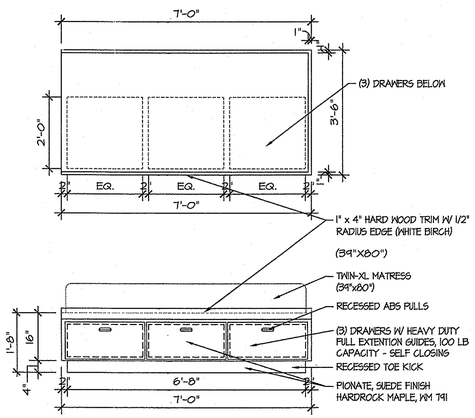

2 BED PLATFORM — Bed Platform
SCALE: 1/2"=1'-0"

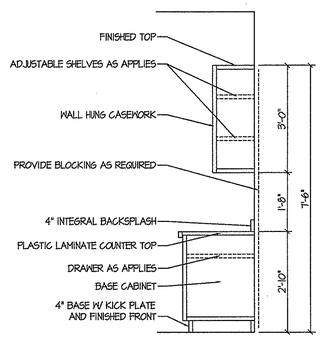

1 CABINETRY SECTION
SCALE: 1/4" = 1'-0"

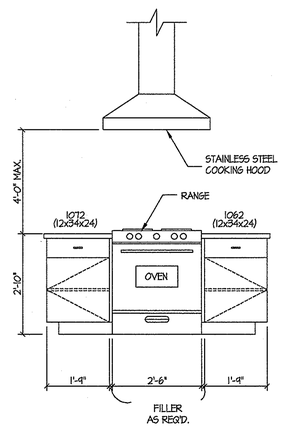

E ISLAND ELEVATION
SCALE: 1/2" = 1'-0"

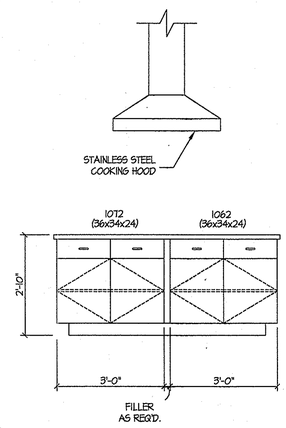

D ISLAND ELEVATION
SCALE: 1/2" = 1'-0"

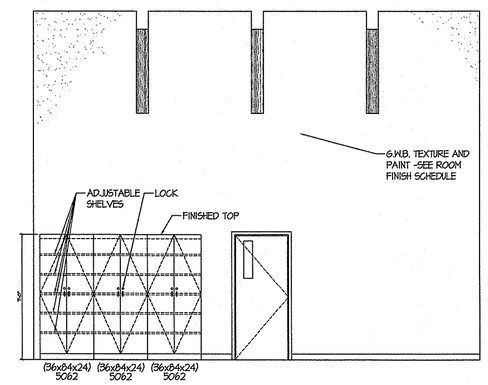

C INTERIOR ELEVATION — DAY ROOM/KITCHEN 106
SCALE: 1/4" = 1'-0"

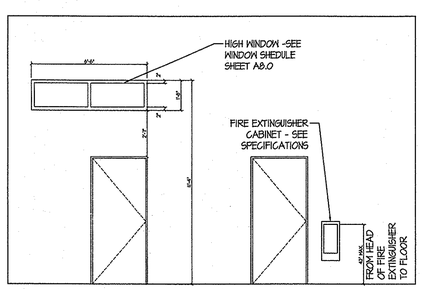

F INTERIOR ELEVATION — ENTRY 102
SCALE: 1/4" = 1'-0"

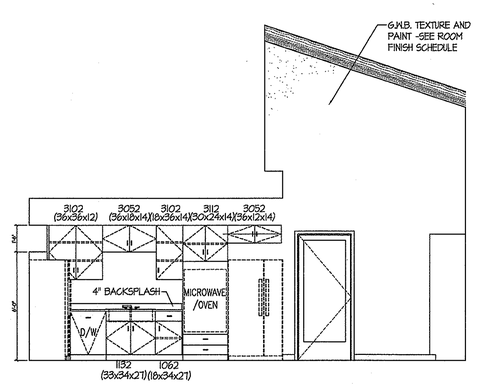

B INTERIOR ELEVATION — DAY ROOM/KITCHEN 106
SCALE: 1/4" = 1'-0"

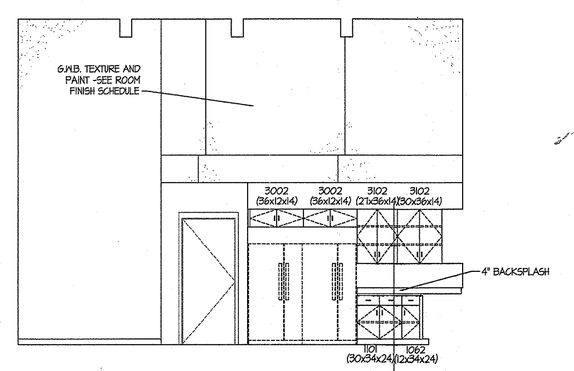

A INTERIOR ELEVATION — DAY ROOM/KITCHEN 106 (1 / A7.1)
SCALE: 1/4" = 1'-0"

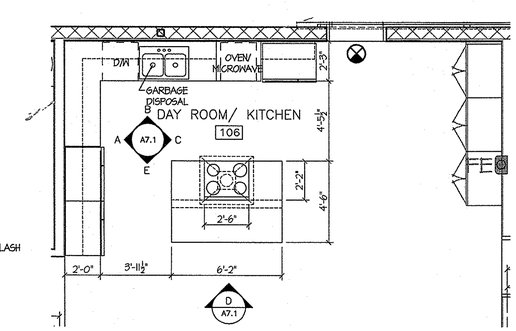

1 ENLARGED PLAN — DAY ROOM/KITCHEN 106
SCALE: 1/4" = 1'-0"

HUNT & CARAWAY
Architects, ltd.
7145 North 57th Drive
Glendale, Arizona 85301
Voice (623) 934-4090 Fax (623) 934-4501

Arizona Army National Guard
Silverbell Fire Station No. 361
For
AZ Department of Emergency and Military Affairs

Interior Elevations

Revisions:

Drawn by:	T.A.
Checked by:	J.S.
Scale:	As Shown
Date:	08/21/06

REGISTERED ARCHITECT CERTIFICATE NO. 22538 TAMARA D. CARAWAY ARIZONA, U.S.A.

JOB # 06-002

SHEET
A7.1

THIS DRAWING & THE DATA CONTAINED HEREIN ARE THE PROPERTY OF HUNT & CARAWAY ARCHITECTS, LTD. AND MAY NOT BE USED, REPRODUCED, COPIED, OR TRANSFERRED WITHOUT THE WRITTEN CONSENT OF THE PROPRIETOR AND/OR COMPANY REPRESENTATIVE. NOR SHALL ANY DATA OR INFORMATION CONTAINED HEREIN BE USED IN PART OR IN FULL FOR ANY PURPOSE OTHER THAN THAT DESCRIBED WITHIN THESE DOCUMENTS.
\\Office\server\Server\PROJECTS\2006\06-002-NATIONAL GUARD MARANA\NATIONAL GUARD MARANA\Sheets\A7.1 Interior Elevations.dwg

ROOM FINISH & MATLS

FLOORING	
F1	CARPET
F2	CERAMIC TILE (12"x12")
F3	CERAMIC TILE (2"x2") MOSAIC
F4	SHEET VINYL
F5	CONCRETE FLOOR W/ SEALER/ HARDENER
FLOOR BASE	
B1	4" RUBBER BASE
B2	CERAMIC TILE BASE
B3	6" COVED SHEET VINYL
WALL FINISH	
P1	GWB W/ SEMI-GLOSS PAINT
P2	CERAMIC TILE
P3	VINYL WALL COVERING
P4	WR GWB W/ GLOSS ENAMEL PAINT
P5	WR GWB W/ EPOXY PAINT
P6	FIBERGLASS REINF. PANEL (FRP)
P7	CLEAR WATERSEALER
P8	1/2" PLY. OVER G.W.B. W/ SEMI-GLOSS PAINT
CEILING	
C1	GWB W/ SEMI-GLOSS PAINT
C2	24" x 24" SUSP. ACOUST. CLG.
C3	WR GWB W/ GLOSS ENAMEL PAINT
C4	EXPOSED STRUCTURE
C5	WR GWB W/ EPOXY PAINT

ROOM FINISH SCHEDULE

ROOM NO	ROOM NAME	FLOOR	BASE	WALLS				CEILING		NOTES
				N	S	E	W	MATL	HEIGHT	
101	CREW	F1	B1	P1	P1	P1	P1	C2	9'-6"	3
102	ENTRY	F2	B2	P1	P1	P1	P3	C1	VARIES	3
103	PREVENTION	F2	B2	P1	P1	P1	P1	C2	VARIES	3
104	CHIEF	F1	B1	P3	P1	P1	P1	C1	9'-0"	3
105	R.R.	F2	B2	P2/P5	P2/P5	P2/P5	P2/P5	C3	8'-6"	3
106	DAY ROOM/KITCHEN	F2	B2	P1	P1	P1	P1	C1/C3	VARIES/9'-0"	3
107	HALL	F2	B2	P1	P1	P1	P1	C2	9'-0"	3
108	CLASSROOM	F2	B2	P1	P1	P1	P1	C2	9'-0"	3
109	BIOHAZARD	F4	B3	P5	P5	P5	P5	C5	9'-0"	3
110	DORM	F1	B1	P3	P1	P3	P1	C2	9'-0"	3
111	WOMAN R.R.	F3	B2	P2/P5	P2/P5	P2/P5	P2/P5	C3	9'-0"	2, 3
112	HALL	F2	B2	--	P1	P1	P3	C2	9'-0"	3
113	DORM	F1	B1	P3	P1	P1	P3	C1	9'-0"	3
114	DORM	F1	B1	P3	P1	P1	P3	C1	9'-0"	3
115	DORM	F1	B1	P3	P1	P1	P3	C1	9'-0"	3
116	HALL	F2	B2	P1/P3	P1	--	P1	C2	9'-0"	3
117	JAN.	F4	B3	P4/P6	P4	P4	P4/P6	C3	9'-0"	1, 3
118	MAN R.R.	F3	B2	P2/P5	P2/P5	P2/P5	P2/P5	C3	9'-0"	3
119	SHWR.	F3	B2	P2/P5	P2/P5	P2/P5	P2/P5	C3	9'-0"	2, 3
120	BAY	F5	--	P7	P7	P7	P7	C4	VARIES	3
121	BAY	F5	--	P7	P7	P7	P7	C4	VARIES	3
122	BAY	F5	--	P7	P7	P7	P7	C4	VARIES	3
123	COMM. ROOM	F2	B2	P8	P8	P8	P8	C1	9'-0"	3

ROOM FINISH GENERAL NOTES

1. FRP WAINSCOAT AT +5'-4" A.F.F. 4'-0" EA. WAY BEHIND MOP SINK.
2. SEE INTERIOR ELEVATIONS SHT. A7.0
3. ALL THE WALL FINISH ORIENTATIONS ARE BASED OFF OF PLAN NORTH.

FRAMES AND GLAZING SCHEDULE

SYMBOLS	GLAZING TYPES
▽ BLIND LOCATIONS	(1) INSULATED GLASS
(X) GLAZING TYPES	(2) LAMINATED GLASS
[1] DOOR TYPE	(3) TINTED GLASS
* SEE NOTE NUMBER 5	

NOTES:

1.) DOORS IN FRAMES WITH GLAZING SHALL HAVE LAMINATED GLAZING. DOORS SHALL CARRY SAME RATING AS FRAME SEE OPENING SCHEDULE.

2.) GLASS STOPS SHALL OCCUR AT INTERIOR SIDE OF FRAME.

3.) FRAMES OCCURRING IN MORE THAN ONE LOCATION MAY HAVE ALTERNATE INSTALLATION REQUIREMENTS AS ADJACENT WALL CONSTRUCTION MAY DIFFER. DETAILING SHOWN FOR FRAME CONSTRUCTION.

4.) FRAME AND GLAZING REQUIRED RATED IF IN RATED AREA

5.) SAFETY GLAZING REQUIRED IF PANEL IS GREATER THAN 9 SQ. FT.

DOOR AND FRAME SCHEDULE

MARK	DOOR						FRAME					FIRE RATING LABEL	NOTES
	SIZE			MATL	EL	GLAZING	MATL	EL	DETAIL				
	WD	HGT	THK						HEAD	JAMB	SILL		
101A	3'-0"	7'-0"	1 3/4"	MT.	B	(2)	H.M.	1	1/A8.1	2/A8.1	7/A8.1	--	1, 2
102A	3'-0"	6'-10"	1 3/4"	MT.	C	(1)(2)(3)	NO FRAME	---	5/A8.1	5/A8.1	6/A8.1	--	2
102B	3'-0"	7'-0"	1 3/4"	MT.	B	(2)	H.M.	1	1/A8.1	2/A8.1	7/A8.1	--	2
103A	3'-0"	7'-0"	1 3/4"	S.C.W.D.	A	--	H.M.	1	1/A8.1	2/A8.1	7/A8.1	--	1, 2
104A	3'-0"	7'-0"	1 3/4"	S.C.W.D.	A	--	H.M.	1	1/A8.1	2/A8.1	7/A8.1	20 MIN.	2
104B	3'-0"	7'-0"	1 3/4"	S.C.W.D.	A	--	H.M.	1	1/A8.1	2/A8.1	7/A8.1	20 MIN.	1, 2
105A	3'-0"	7'-0"	1 3/4"	S.C.W.D.	A	--	H.M.	1	1/A8.1	2/A8.1	7/A8.1	--	1, 2
106A	3'-0"	7'-0"	1 3/4"	MT.	B	(2)	H.M.	1	1/A8.1	2/A8.1	7/A8.1	--	1, 2
106B	3'-0"	7'-0"	1 3/4"	MT.	B	(2)	H.M.	1	1/A8.1	2/A8.1	7/A8.1	--	1, 2
106C	3'-0"	7'-0"	1 3/4"	MT.	C	(1)(2)(3)	H.M.	2	3/A8.1	4/A8.1	6/A8.1	--	2
107A	3'-0"	7'-0"	1 3/4"	MT.	B	(2)	H.M.	2	3/A8.1	4/A8.1	8/A8.1	--	2
108A	3'-0"	7'-0"	1 3/4"	MT.	B	(2)	H.M.	2	3/A8.1	4/A8.1	8/A8.1	--	1, 2
108B	3'-0"	7'-0"	1 3/4"	S.C.W.D.	A	--	H.M.	1	1/A8.1	2/A8.1	7/A8.1	--	1, 2
109A	3'-0"	7'-0"	1 3/4"	MT.	B	(2)	H.M.	2	3/A8.1	4/A8.1	9/A8.1	--	1, 2
110A	3'-0"	7'-0"	1 3/4"	S.C.W.D.	A	--	H.M.	1	1/A8.1	2/A8.1	7/A8.1	20 MIN.	1, 2
111A	3'-0"	7'-0"	1 3/4"	S.C.W.D.	A	--	H.M.	1	1/A8.1	2/A8.1	7/A8.1	--	1, 2
112A	3'-0"	7'-0"	1 3/4"	MT.	B	(2)	H.M.	2	3/A8.1	4/A8.1	7/A8.1	--	2
113A	3'-0"	7'-0"	1 3/4"	S.C.W.D.	A	--	H.M.	1	1/A8.1	2/A8.1	7/A8.1	20 MIN.	1, 2
114A	3'-0"	7'-0"	1 3/4"	S.C.W.D.	A	--	H.M.	1	1/A8.1	2/A8.1	7/A8.1	20 MIN.	1, 2
115A	3'-0"	7'-0"	1 3/4"	S.C.W.D.	A	--	H.M.	1	1/A8.1	2/A8.1	7/A8.1	20 MIN.	1, 2
116A	3'-0"	7'-0"	1 3/4"	MT.	B	(2)	H.M.	2	3/A8.1	4/A8.1	6/A8.1	--	2
117A	3'-0"	7'-0"	1 3/4"	S.C.W.D.	A	--	H.M.	1	1/A8.1	2/A8.1	8/A8.1	--	1, 2
118A	3'-0"	7'-0"	1 3/4"	S.C.W.D.	A	--	H.M.	1	1/A8.1	2/A8.1	7/A8.1	--	1, 2
120A	14'-0"	14'-0"	1"	MT.	E	--	--	--	--	--	--	--	--
120B	14'-0"	14'-0"	1"	MT.	E	--	--	--	--	--	--	--	--
121A	14'-0"	14'-0"	1"	MT.	E	--	--	--	--	--	--	--	--
121B	14'-0"	14'-0"	1"	MT.	E	--	--	--	--	--	--	--	--
122A	14'-0"	14'-0"	1"	MT.	E	--	--	--	--	--	--	--	--
122B	14'-0"	14'-0"	1"	MT.	E	--	--	--	--	--	--	--	--
122C	3'-0"	7'-0"	1 3/4"	MT.	D	--	H.M.	2	3/A8.1	4/A8.1	6/A8.1	--	2
123A	3'-0"	7'-0"	1 3/4"	S.C.W.D.	A	--	H.M.	1	1/A8.1	2/A8.1	8/A8.1	--	1, 2

DOOR GENERAL NOTES

1. THE DOOR HAS TO SHOW APPROPRIATE SIGN. SIGN SHALL BE PLACED ON THE DOOR AT HEIGHT OF 60". TYPE AND MATERIAL SELECTED BY OWNER - SEE SPECIFICATIONS.
2. REFER TO HARDWARE SCHEDULE ON SPECIFICATIONS.

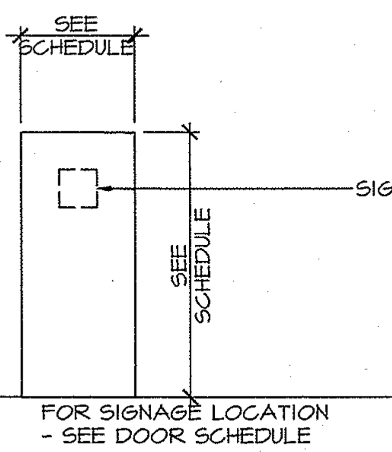

A — Door Elevations — SCALE: 1/4"=1'-0"

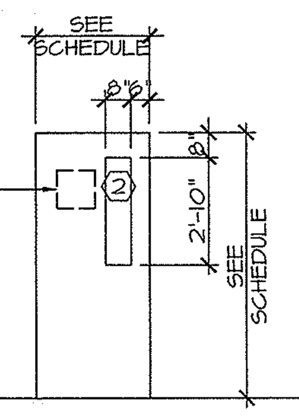

B — Door Elevations — SCALE: 1/4"=1'-0"

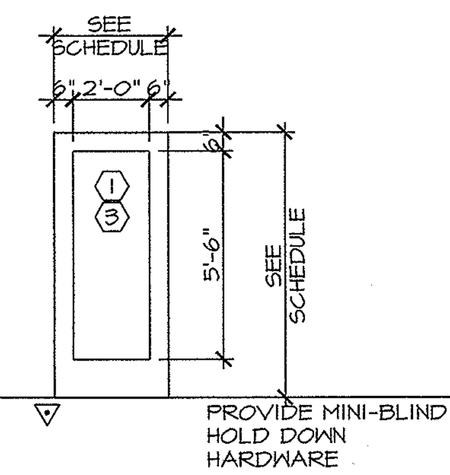

C — Door Elevations — SCALE: 1/4"=1'-0"

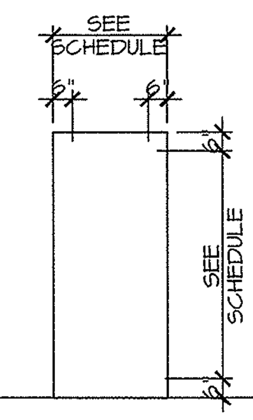

D — Door Elevations — SCALE: 1/4"=1'-0"

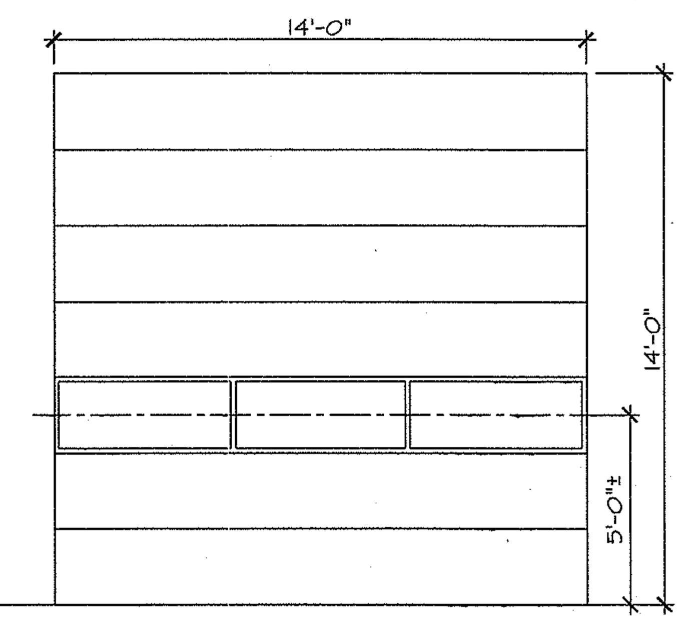

E — Door Elevations — SCALE: 1/4"=1'-0"

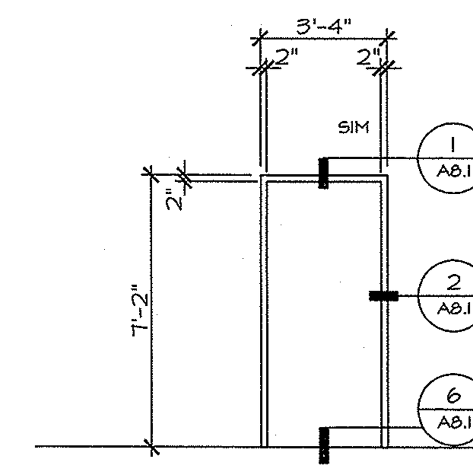

1 — Frame Elevations — SCALE: 1/4"=1'-0"

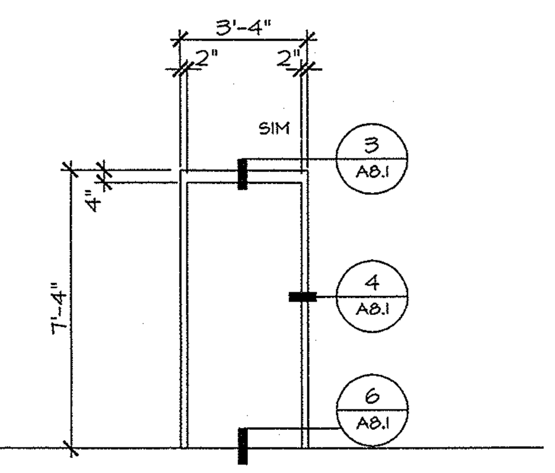

2 — Frame Elevations — SCALE: 1/4"=1'-0"

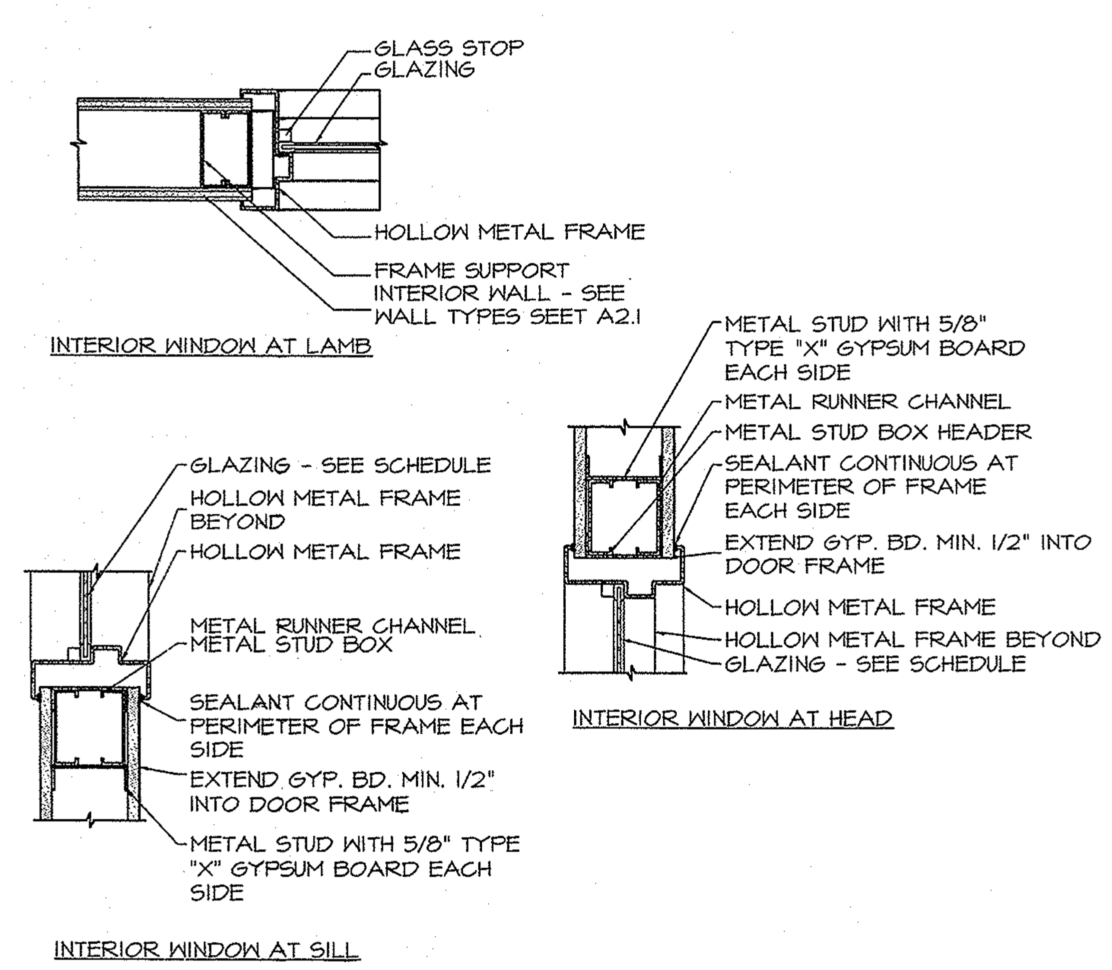

1 — Typical Hollow Metal Window @ Stud Wall — HOLLOW METAL WINDOW @ STUD WALL — SCALE: 1 1/2"=1'-0"

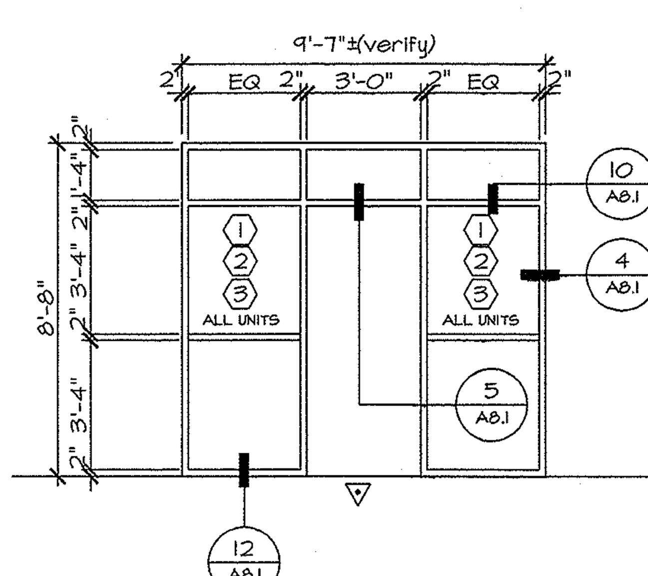

1 — Window Frame Elevation — SCALE: 1/4"=1'-0"

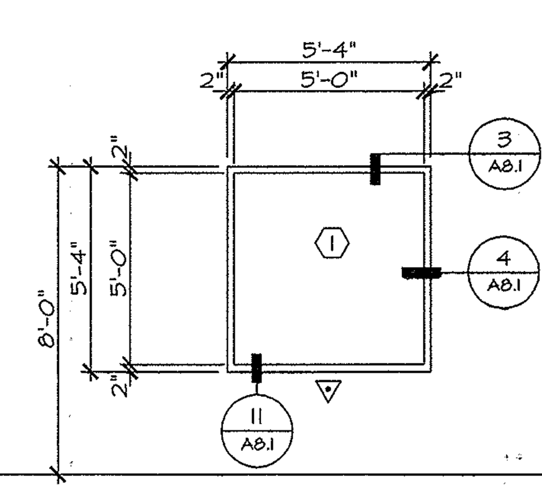

2 — Window Frame Elevation — SCALE: 1/4"=1'-0"

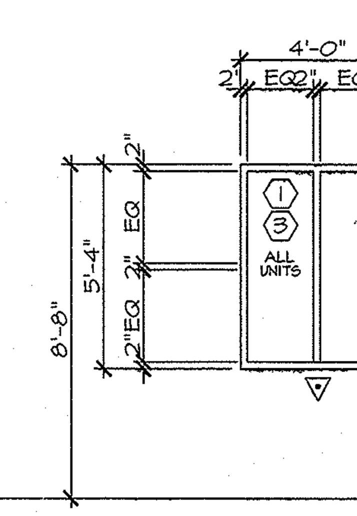

3 — Window Frame Elevation — SCALE: 1/4"=1'-0"

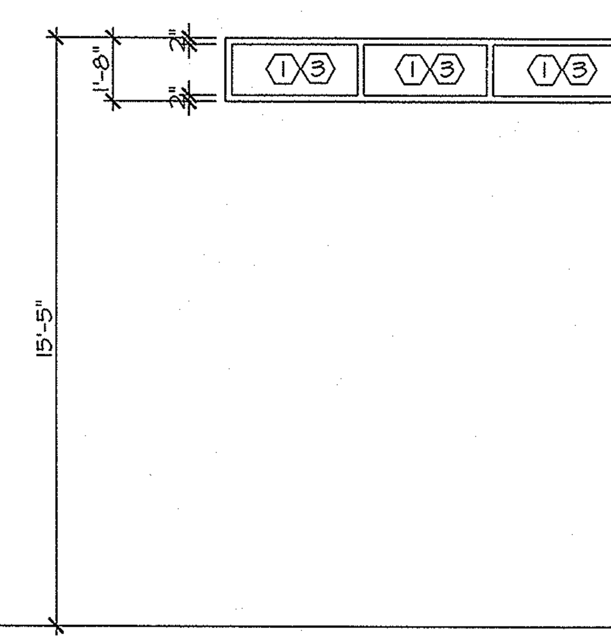

4 — Window Frame Elevation — SCALE: 1/4"=1'-0"

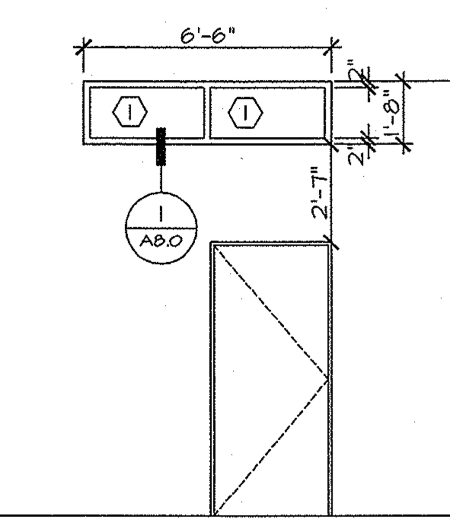

5 — Window Frame Elevation — SCALE: 1/4"=1'-0"

HUNT & CARAWAY Architects, ltd.

7145 North 57th Drive
Glendale, Arizona 85301
Voice (623) 934-4090 Fax (623) 934-4501

Arizona Army National Guard
Silverbell Fire Station No. 361
For
AZ Department of Emergency and Military Affairs

Room Finish Schedule & Door Schedule. Details.

Revisions:

Drawn by:	T.A.
Checked by:	J.S.
Scale:	As Shown
Date:	08/21/06

REGISTERED ARCHITECT CERTIFICATE NO. 22538 TAMARA D. CARAWAY Date Signed 9-21-06 ARIZONA, U.S.A.

JOB # 06-002

SHEET A8.0

THIS DRAWING & THE DATA CONTAINED HEREIN ARE THE PROPERTY OF HUNT & CARAWAY ARCHITECTS, LTD. AND MAY NOT BE USED, REPRODUCED, COPIED, OR TRANSFERRED WITHOUT THE WRITTEN CONSENT OF THE PROPRIETOR AND/OR COMPANY REPRESENTATIVE. NOR SHALL ANY DATA OR INFORMATION CONTAINED HEREIN BE USED IN PART OR IN FULL FOR ANY PURPOSE OTHER THAN THAT DESCRIBED WITHIN THESE DOCUMENTS.
\\officeserver\server\#PROJECTS\2006\06-002-NATIONAL GUARD MARANA\NATIONAL GUARD MARANA\Sheets\A8.0 Room Finish Schedule & Door Schedule.dwg

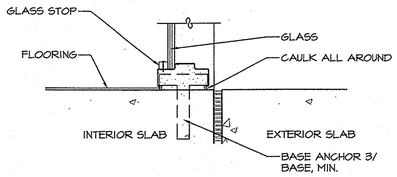

12 HOLLOW METAL WINDOW SILL — Typical Hollow Metal Window Sill @ Conc. — SCALE: 1 1/2"=1'-0"

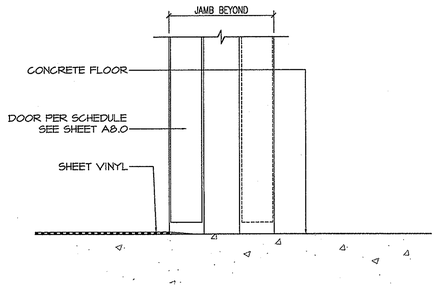

9 CONC TO VINYL — Concrete to Sheet Vinyl Floor Transition — SCALE: 3"=1'-0"

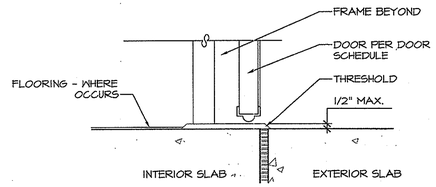

6 SILL DETAIL — Typical Sill Detail — SCALE: 1 1/2"=1'-0"

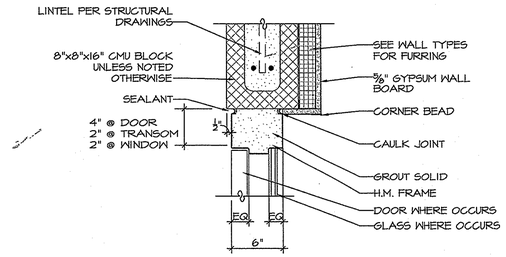

3 HOLLOW METAL HEAD — Typical Hollow Metal Head Detail (CMU) — SCALE: 1 1/2"=1'-0"

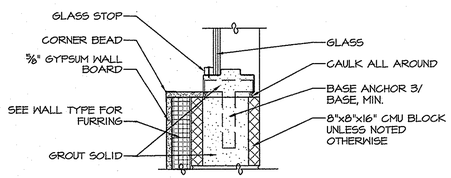

11 HOLLOW METAL WINDOW SILL — Typical Hollow Metal Window Sill @ CMU — SCALE: 1 1/2"=1'-0"

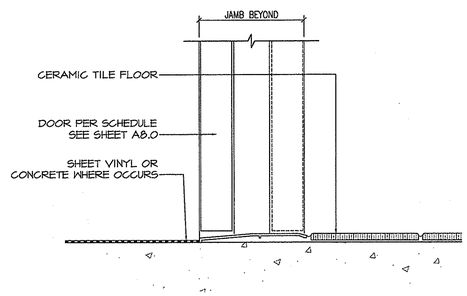

8 TILE TO VINYL — Tile to Sheet Vinyl Floor Transition — SCALE: 3"=1'-0"

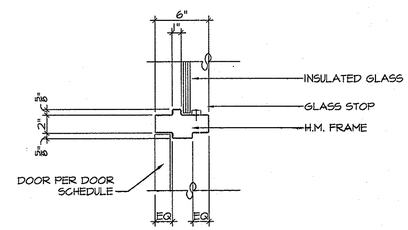

5 HOLLOW METAL HEAD @ TRANSOM — Typical Hollow Metal Head @ Transom Detail — SCALE: 1 1/2"=1'-0"

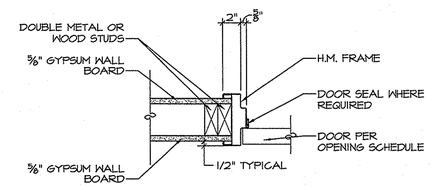

2 HOLLOW METAL JAMB — Typical Interior Hollow Metal Jamb Detail — SCALE: 1 1/2"=1'-0"

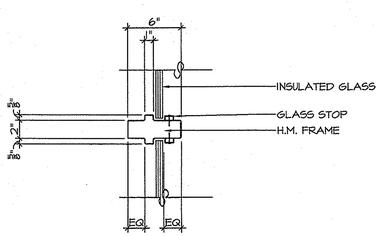

10 HOLLOW METAL MULLION — Typical Hollow Metal Mullion Detail — SCALE: 1 1/2"=1'-0"

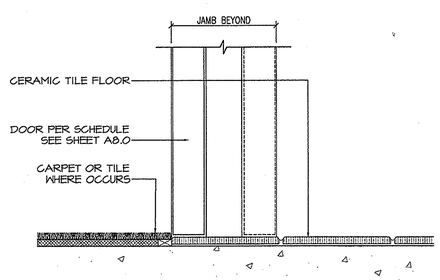

7 TILE TO CARPET — Tile to Carpet Floor Transition — SCALE: 3"=1'-0"

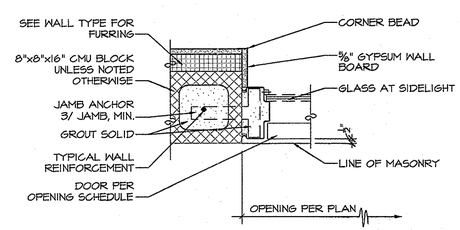

4 HOLLOW METAL JAMB — Typical Hollow Metal Jamb Detail (CMU) — SCALE: 1 1/2"=1'-0"

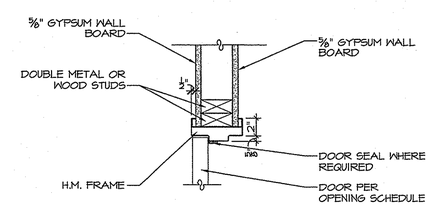

1 HOLLOW METAL HEAD — Typical Interior Hollow Metal Head Detail — SCALE: 1 1/2"=1'-0"

HUNT & CARAWAY
Architects, ltd.

7145 North 57th Drive
Glendale, Arizona 85301
Voice (623) 934-4090 Fax (623) 934-4501

Arizona Army National Guard
Silverbell Fire Station No. 361
For
AZ Department of Emergency and Military Affairs

Door & Window Details

Revisions:

Drawn by:	T.A.
Checked by:	J.S.
Scale:	As Shown
Date:	08/21/06

REGISTERED ARCHITECT CERTIFICATE NO. 22538 TAMARA D. CARAWAY Signed ARIZONA, U.S.A.

JOB # 06-002

SHEET A8.1

THIS DRAWING & THE DATA CONTAINED HEREIN ARE THE PROPERTY OF HUNT & CARAWAY ARCHITECTS, LTD. AND MAY NOT BE USED, REPRODUCED, COPIED, OR TRANSFERRED WITHOUT THE WRITTEN CONSENT OF THE PROPRIETOR AND/OR COMPANY REPRESENTATIVE. NOR SHALL ANY DATA OR INFORMATION CONTAINED HEREIN BE USED IN PART OR IN FULL FOR ANY PURPOSE OTHER THAN THAT DESCRIBED WITHIN THESE DOCUMENTS.

\\OFfileserver\all\arch\PROJECTS\2006\06-002-NATIONAL GUARD THOMANN\NATIONAL GUARD THOMANN\Sheets\A08.1 Door & Window Details.dwg

THIS DRAWING & THE DATA CONTAINED HEREIN ARE THE PROPERTY OF HUNT & CARAWAY ARCHITECTS, LTD. AND MAY NOT BE USED, REPRODUCED, COPIED, OR TRANSFERRED WITHOUT THE WRITTEN CONSENT OF THE PROPRIETOR AND/OR COMPANY REPRESENTATIVE, NOR SHALL ANY DATA OR INFORMATION CONTAINED HEREIN BE USED IN PART OR IN FULL FOR ANY PURPOSE OTHER THAN THAT DESCRIBED WITHIN THESE DOCUMENTS.

\\Office-server\Server\PROJECTS\2006\06-002-NATIONAL GUARD MARANA\NATIONAL GUARD MARANA\Sheets\V4.0 ADA DETAILS.dwg

HUNT & CARAWAY
Architects, ltd.

7145 North 57th Drive
Glendale, Arizona 85301
Voice (623) 934-4090 Fax (623) 934-4501

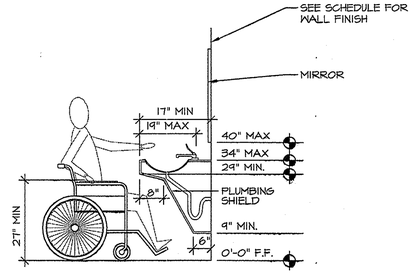

6 ADULT LAVATORY HEIGHTS 2 — Adult Lavatory Heights 2 — SCALE: 1/2"=1'0"

NOTE:
SPOUT SHALL BE WITHIN 3" OF FRONT AND SHALL DIRECT FLOW PARALLEL TO FRONT - FLOW SHALL BE A MINIMUM OF 4" HIGH.

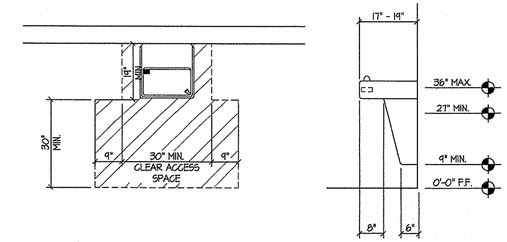

3 Drinking Fountain Clearance — Drinking Fountain Clearance — SCALE: 1/2"=1'0"

NOTES:

1. VERIFY INSTALLATION HEIGHTS AND PROCEEDURES W/ MANUFACTURE TYPICAL.
2. EQUIPMENT NOT SHOWN:
   WC WATER CLOSET
   UR URINAL
   SH 5" X 16" S.S. SHELF
3. PROVIDE SOLID BLOCKING FOR GRAB BARS AND ALL EQUIPMENT AS REQUIRED BY MFR.

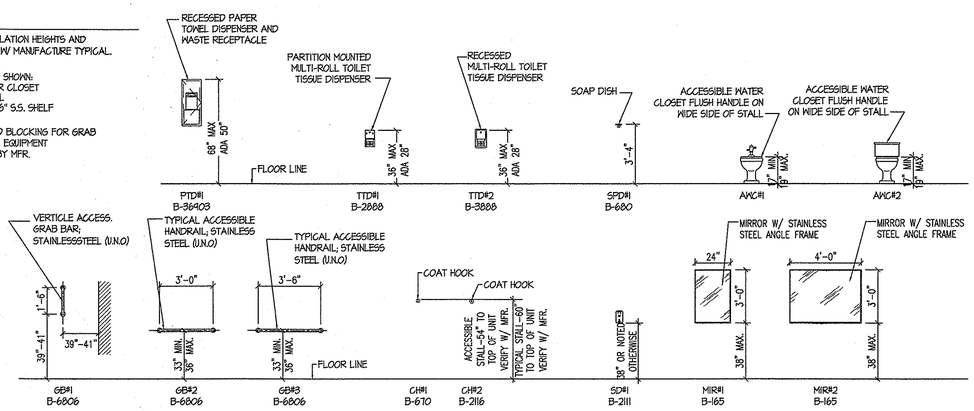

8 STANDART EQUIPMENT HEIGHTS — Standart Equipment Heights — SCALE: 1/4"=1'0"

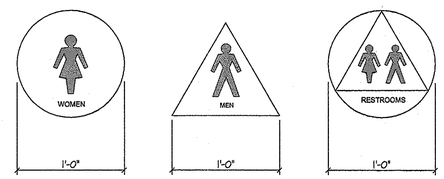

SYMBOL DESCRIPTION:

NEXT TO DOORWAYS TO MEN'S SANITARY FACILITIES AN EQUILATERAL TRIANGLE 1/4" THICK WITH EDGES 12" LONG AND A VERTEX POINTING UPWARD SHALL BE INSTALLED. THE WOMEN'S FACILITIES SHALL HAVE INSTALLED A CIRCLE 1/4" THICK AND 12" IN DIAMETER. THESE GEOMETRIC SYMBOLS SHALL BE PLACED ON THE ADJACENT WALL OR ON THE DOOR AT A HEIGHT OF 60" AND THEIR COLOR AND CONTRAST SHALL BE DISTINCTLY DIFFERENT FROM THE COLOR AND CONTRAST OF THE WALL. FOR THE WALLS AT DOORS LEADING TO A UNISEX REST ROOM A COMBINED CIRCLE AND TRIANGLE SIGN SHALL BE USED AS SHOWN ABOVE. ALSO, IMMEDIATELY BELOW EACH SYMBOL SHALL BE APPROPRIATE GRADE 2 BRAILLE.

5 ADA SIGNAGE — ADA Signage — SCALE: 1 1/2"=1'0"

NOTE: X=12" IF DOOR HAS BOTH CLOSER AND LATCH

NOTE: Y=48" MIN. IF DOOR HAS BOTH LATCH AND CLOSER

NOTE: Y=48" MIN. IF DOOR HAS CLOSER

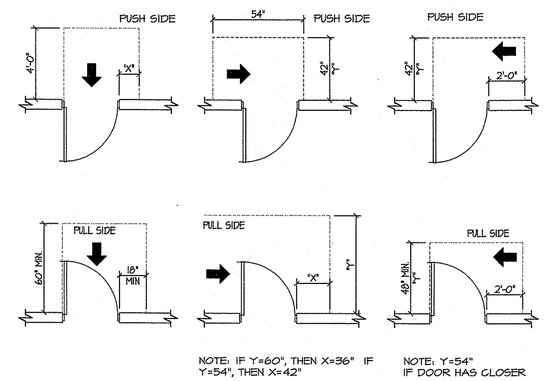

NOTE: IF Y=60", THEN X=36" IF Y=54", THEN X=42"

NOTE: Y=54" IF DOOR HAS CLOSER

2 DOOR CLEARANCES — Door Clearances — SCALE: 1/4"=1'0"

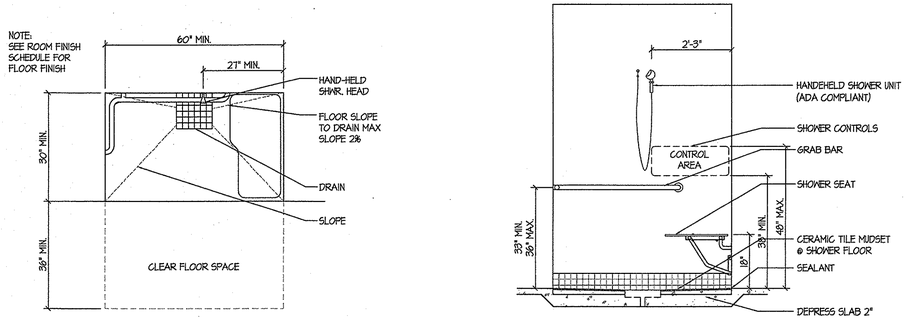

7 XD-01-ADA 60 SHOWER DETAIL — ADA 60" Shower Detail — SCALE: 1/2"=1'0"

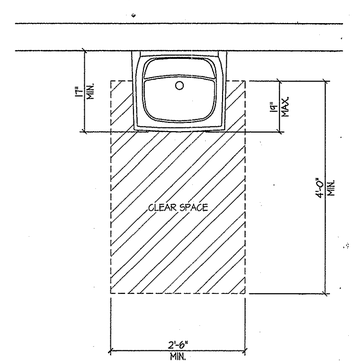

4 LAVATORY CLEARANCE — Lavatory Clearances — SCALE: 3/4"=1'0"

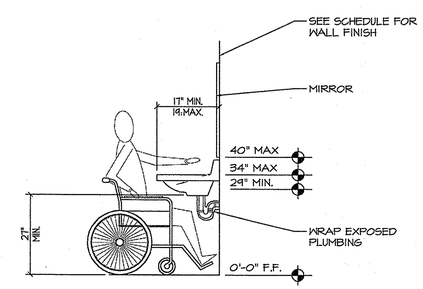

1 ADULT LAVATORY HEIGHTS — Adult Lavatory Heights — SCALE: 1/2"=1'0"

Arizona Army National Guard
Silverbell Fire Station No. 361

For

AZ Department of Emergency and Military Affairs

ADA DETAILS

Revisions:

Drawn by:	T.A.
Checked by:	J.S.
Scale:	As Shown
Date:	08/21/06

REGISTERED ARCHITECT
CERTIFICATE NO. 22538
TAMARA D. CARAWAY
Expires 3-31-07
ARIZONA, U.S.A.

JOB # 06-002

SHEET A9.0

THIS DRAWING & THE DATA CONTAINED HEREIN ARE THE PROPERTY OF HUNT & CARAWAY ARCHITECTS, LTD. AND MAY NOT BE USED, REPRODUCED, COPIED, OR TRANSFERRED WITHOUT THE WRITTEN CONSENT OF THE PROPRIETOR AND/OR COMPANY REPRESENTATIVE NOR SHALL ANY DATA OR INFORMATION CONTAINED HEREIN BE USED IN PART OR IN FULL FOR ANY PURPOSE OTHER THAN THAT DESCRIBED WITHIN THESE DOCUMENTS.

STRUCTURAL NOTES

(SEE PROJECT SPECIFICATION FOR ADDITIONAL REQUIREMENTS)

GENERAL:

1. ALL CONSTRUCTION SHALL CONFORM TO THE 2003 EDITION OF THE INTERNATIONAL BUILDING CODE (IBC) INCLUDING LOCAL JURISDICTION AMENDMENTS.
2. IN SUCH CASE THAT THERE IS NO ARCHITECT FOR THIS PROJECT THE ENGINEER OF RECORD OR OWNER'S REPRESENTATIVE SHALL BE SUBSTITUTED FOR ALL OR ANY REFERENCE TO THE ARCHITECT.
3. THE CONTRACT STRUCTURAL DRAWINGS AND SPECIFICATIONS REPRESENT THE FINISHED STRUCTURE. THEY DO NOT INDICATE THE MEANS OR METHOD OR SEQUENCE OF CONSTRUCTION. THE CONTRACTOR SHALL BE RESPONSIBLE FOR AND PROVIDE ALL MEASURES NECESSARY TO PROTECT THE STRUCTURE DURING CONSTRUCTION. THESE MEASURES SHALL INCLUDE, BUT NOT BE LIMITED TO: BRACING, SHORING OF LOADS DUE TO CONSTRUCTION EQUIPMENT, ETC. THE CONTRACTOR SHALL BE RESPONSIBLE FOR THE DESIGN AND IMPLEMENTATION OF ALL SCAFFOLDING, BRACING AND SHORING. OBSERVATION VISITS TO THE SITE BY THE STRUCTURAL ENGINEER SHALL NOT INCLUDE INSPECTION OF THE ABOVE ITEMS. THE STRUCTURAL ENGINEER WILL NOT BE RESPONSIBLE FOR THE CONTRACTOR'S MEANS, METHODS, TECHNIQUES, SEQUENCES OR PROCEDURES OF CONSTRUCTION, NOR WILL THE STRUCTURAL ENGINEER BE RESPONSIBLE FOR CONSTRUCTION SITE SAFETY, OR THE SAFETY PRECAUTIONS AND THE PROGRAMS INCIDENT THERETO.
4. IT IS THE CONTRACTOR'S RESPONSIBILITY TO INSPECT AND ENSURE THAT ALL STRUCTURAL WORK IS IN CONFORMANCE WITH THE CONTRACT DOCUMENTS. ANY STRUCTURAL INSPECTION/OBSERVATION PROVIDED BY OTHERS (INCLUDING THE STRUCTURAL ENGINEER OF RECORD) DOES NOT RELIEVE THE CONTRACTOR OF THIS RESPONSIBILITY. ANY STRUCTURAL DEVIATIONS FROM THE CONTRACT DOCUMENTS THAT ARE FOUND AT A LATER DATE AND ARE DECLARED TO BE SIGNIFICANT BY THE STRUCTURAL ENGINEER OF RECORD SHALL BE CORRECTED BY THE CONTRACTOR (AT THE CONTRACTOR'S EXPENSE). ANY INDIVIDUAL PERFORMING STRUCTURAL INSPECTIONS/OBSERVATIONS IS NOT AUTHORIZED TO DIRECT OR APPROVE ANY CHANGES FROM THE CONTRACT DOCUMENTS OR STOP AND/OR DELAY THE WORK.
5. CONTRACTOR SHALL VERIFY ALL DIMENSIONS AND COORDINATE SITE CONDITIONS WITH THE DRAWINGS PRIOR TO CONSTRUCTION. ANY CONFLICTS, DISCREPANCIES, OR OMISSIONS SHALL BE RESOLVED WITH THE ARCHITECT PRIOR TO CONSTRUCTION AND PRIOR TO PROCEEDING. DO NOT USE SCALED DIMENSIONS. USE WRITTEN DIMENSIONS OR WHERE NO DIMENSION IS PROVIDED, CONSULT WITH THE ARCHITECT FOR CLARIFICATION BEFORE PROCEEDING WITH THE WORK.
6. CONSTRUCTION MATERIALS SHALL BE SPREAD OUT IF PLACED ON THE STRUCTURE SO AS NOT TO EXCEED THE DESIGN LIVE LOAD PER SQUARE FOOT.
7. WHERE ANY DISCREPANCIES OCCUR BETWEEN PLANS, DETAILS, STRUCTURAL NOTES AND SPECIFICATIONS, THE GREATER REQUIREMENTS SHALL GOVERN. WHERE NO SPECIFIC DETAIL IS SHOWN, CONSTRUCTION SHALL CONFORM TO SIMILAR WORK ON THE PROJECT, OR IF THERE IS NO SIMILAR WORK, THEN CONSTRUCTION SHALL BE AS IS STANDARD IN THE INDUSTRY.
8. NOT ALL OPENINGS OR EQUIPMENT ARE SHOWN ON THE STRUCTURAL DRAWINGS, AND IT IS THE GENERAL CONTRACTORS RESPONSIBILITY TO COORDINATE WITH THE SUBCONTRACTORS AND EQUIPMENT SUPPLIERS/MANUFACTURERS. EQUIPMENT BEING SUPPORTED BY OR SUSPENDED FROM THE STRUCTURE SHALL BE COORDINATED WITH THE MANUFACTURER OF ANY PRE-ENGINEERED FRAMING OR COMPONENTS. ALL OPENINGS SHALL BE PROPERLY REINFORCED AS APPROVED BY THE ENGINEER.
9. REFER TO ARCHITECTURAL, MECHANICAL, PLUMBING, ELECTRICAL AND CIVIL DRAWINGS FOR LOCATION AND DETAILS OF BLOCKOUTS, INSERTS, OPENINGS, CURBS, EQUIPMENT LOADS, EQUIPMENT BASES AND PADS, PIPING, DUCTS, SITE WORK ITEMS, ETC. AND DIMENSIONS NOT SHOWN ON STRUCTURAL DRAWINGS.
10. APPROVED EQUAL OPTIONS ARE FOR THE CONTRACTOR'S CONVENIENCE AND ARE SUBJECT TO APPROVAL BY THE ARCHITECT. IF AN OPTION IS CHOSEN, THE CONTRACTOR SHALL BE RESPONSIBLE FOR ALL CHANGES AND COSTS NECESSARY AND FOR COORDINATION OF ALL DETAILS AS REQUIRED TO INCORPORATE THE OPTION INTO THE WORK.
11. ALL PRE-ENGINEERED/PREFABRICATED ITEMS AND MATERIALS SHALL BE INSTALLED IN STRICT ACCORDANCE WITH THE MANUFACTURERS REQUIREMENTS AND ALTERATIONS ARE ALLOWED ONLY IN WRITING.
12. ALL DETAILS SHOWN SHALL BE INCORPORATED INTO THE PROJECT AT ALL APPROPRIATE LOCATIONS, WHETHER SPECIFICALLY INDICATED OR NOT. TYPICAL DETAILS MAY OR MAY NOT BE CUT ON THE DRAWINGS, AND DETAILS MAY OR MAY NOT BE CUT AT ALL SPECIFIC LOCATIONS, BUT SHALL APPLY UNLESS NOTED OTHERWISE.
13. WHERE REFERENCE IS MADE TO VARIOUS BUILDING CODES, TEST STANDARDS, REFERENCE STANDARDS, ETC. FOR MATERIALS OR PERFORMANCE, SUCH REFERENCE MATERIALS SHALL BE THE CURRENT EDITION AND/OR ADDENDUM.
14. ANY ENGINEERING DESIGN PROVIDED BY OTHERS AND SUBMITTED FOR REVIEW SHALL BEAR THE SEAL OF A PROFESSIONAL CIVIL OR STRUCTURAL ENGINEER REGISTERED IN THE STATE OF THE LOCAL JURISDICTION.
15. FOR CLARITY, ALL ROOF, WALL AND/OR FLOOR OPENINGS MAY NOT BE SHOWN ON STRUCTURAL DRAWINGS. FOR EXACT SIZE, NUMBER AND LOCATION OF OPENINGS, SEE ARCHITECTURAL, MECHANICAL, ELECTRICAL AND PLUMBING DRAWINGS. FOR FRAMING AT OPENINGS, SEE TYPICAL STRUCTURAL DETAILS. VERIFY ALL SIZES, WEIGHTS AND LOCATION OF MECHANICAL AND ELECTRICAL EQUIPMENT, DUCTS, ETC. WITH MECHANICAL AND ELECTRICAL ENGINEERS THROUGH ARCHITECT.
16. ALL GLASS CURTAIN WALLS, WINDOWS, STOREFRONT WINDOW SYSTEMS, ETC. AND THEIR SUPPORT MULLIONS SHALL BE AS DESIGNED BY OTHERS. COORDINATE WITH ARCHITECT AND PROVIDE DESIGN CALCULATIONS, AND DRAWINGS SEALED BY A REGISTERED ENGINEER.
17. COORDINATE ALL SHOP DRAWING SUBMITTAL REQUIREMENTS WITH THE STRUCTURAL NOTES AND THE ARCHITECT.
18. DESIGN LOADS:
    ROOF LIVE LOAD = 20 PSF (REDUCIBLE PER IBC SECTION 1607.1)
    ROOF DEAD LOAD = 17 PSF
    ROOF WIND UPLIFT LOAD = 5 PSF (NET)

    WIND:
    BASIC WIND SPEED = 90 MPH (3 SEC GUST);Iw = 1.0, EXPOSURE "C";
    BUILDING CATEGORY = III
    INTERNAL PRESSURE COEFFICIENT, GCp = ± 0.18 (ENCLOSED BUILDING PER ASCE 7, SECTION 6)
    COMPONENTS AND CLADDING = PER IBC TABLE 1609.6.2.1(2) 10 PSF MIN

    SEISMIC:
    SEISMIC USE GROUP III; Sds = 0.338; Sd1 = 0.141; Ie = 1.25; SITE CLASS D;
    SEISMIC DESIGN CATEGORY D, R = 3.5 (INTERMEDIATE REINFORCED MASONRY SHEAR WALLS);
    SEISMIC BASE SHEAR (NORTH/SOUTH DIRECTION) = 18,000 LBS
    SEISMIC BASE SHEAR (EAST/WEST DIRECTION) = 30,000 LBS

FOUNDATIONS:

1. FOUNDATION DESIGN BASED ON GEOTECHNICAL REPORT # 26557 BY LMT ENGINEERING, INC. DATED AUGUST 8, 2006. DESIGN SOIL BEARING PRESSURE = 2000 PSF AT 1'-6" BELOW LOWEST ADJACENT FINISHED GRADE. SPREAD FOOTINGS SHALL BEAR ON ENGINEERED FILL PER THE GEOTECHNICAL REPORT AND TYPICAL EARTHWORK DETAIL. FOR BOTTOM OR TOP OF FOOTING ELEVATIONS, COORDINATE WITH FOUNDATION DETAILS AND/OR PLANS.
2. ALL CONSTRUCTION SHALL COMPLY WITH THE RECOMMENDATIONS OF THE GEOTECHNICAL REPORT. THE STRUCTURAL ENGINEER IS NOT RESPONSIBLE FOR ANY GEOTECHNICAL ASPECTS OF THIS PROJECT.
3. THE OWNER SHALL EMPLOY A REGISTERED GEOTECHNICAL ENGINEER TO PERFORM NECESSARY TESTING AND INSPECTIONS FOR QUALITY CONTROL AND TO ENSURE THAT THE REQUIREMENTS OF THE GEOTECHNICAL REPORT ARE COMPLIED WITH. TEST REPORTS SHALL BE SUBMITTED DIRECTLY TO THE ARCHITECT AND ENGINEER FROM THE GEOTECHNICAL ENGINEER, WITH COPY TO CONTRACTOR. INCLUDE THE FOLLOWING INFORMATION IN THE REPORTS:
   - TEST REPORT ON BORROW MATERIALS
   - VERIFICATION OF EACH FOOTING SUB GRADE
   - FIELD DENSITY TEST REPORTS
   - ONE OPTIMUM MOISTURE
   - MAXIMUM DENSITY CURVE FOR EACH TYPE OF SOIL ENCOUNTERED.
4. FILLED EXCAVATIONS OR BURIED STRUCTURES SUCH AS CESSPOOLS, CISTERNS, EXISTING FOUNDATIONS, ETC., OR ANY UNUSUAL OR UNANTICIPATED GEOLOGIC CONDITIONS ENCOUNTERED DURING SITE CLEARING OR EXCAVATION SHALL BE BROUGHT TO THE ATTENTION OF THE GEOTECHNICAL ENGINEER IMMEDIATELY.
5. ABANDONED FOOTINGS, NEW OR EXISTING UTILITIES, ETC., THAT INTERFERE WITH NEW CONSTRUCTION SHALL BE REROUTED OR REMOVED AS COORDINATED WITH THE ARCHITECT AND AS DIRECTED BY THE GEOTECHNICAL ENGINEER.
6. SLOPE ALL EXTERIOR FINISHED GRADES AWAY FROM THE BUILDING TO ENSURE NO PONDING OF WATER OCCURS AROUND BUILDINGS. CONTRACTOR SHALL PROVIDE FOR PROPER DE-WATERING OF EXCAVATIONS FROM SURFACE WATER, GROUND WATER, GROUND WATER, SEEPAGE, ETC.
7. BACKFILL MATERIAL. DO NOT PLACE ANY BACKFILL BEHIND WALLS BEFORE CONCRETE OR MASONRY HAS ATTAINED FULL DESIGN STRENGTH. CONTRACTOR SHALL BRACE OR PROTECT ALL WALLS, INCLUDING PIT WALLS BELOW GRADE FROM EARTH PRESSURE LOADS AND OVERTURNING, UNTIL THE STRUCTURE IS COMPLETELY IN PLACE AND HAS ATTAINED FULL STRENGTH. CONTRACTOR SHALL PROVIDE FOR DESIGN, PERMITS AND INSTALLATION OF ALL BRACING.
8. CONTRACTOR IS RESPONSIBLE FOR THE DESIGN AND INSTALLATION OF ALL SHORING, CRIBBING, SHEATHING, SHEET PILING, ETC. AS REQUIRED TO SAFELY RETAIN EXCAVATIONS, EARTH BERMS AND TRENCHES DURING CONSTRUCTION.

CAST-IN-PLACE CONCRETE:

1. CONCRETE WORK SHALL CONFORM TO ALL REQUIREMENTS OF ACI 301, "SPECIFICATIONS FOR STRUCTURAL CONCRETE FOR BUILDINGS" AND ACI 318, "BUILDING CODE REQUIREMENTS FOR REINFORCED CONCRETE", AND IBC CHAPTER 19.
2. CONCRETE SHALL BE READY MIXED CONCRETE IN ACCORDANCE WITH ASTM C94. MINIMUM 28 DAY COMPRESSIVE STRENGTH SHALL BE AS FOLLOWS:

NORMAL WEIGHT CONCRETE	STRENGTH	MAXIMUM AGGREGATE SIZE (INCHES)	MAXIMUM SLUMP (INCHES)
FOOTINGS	3,000 PSI *	1 1/2"	4"
SLAB ON GRADE	3,000 PSI *	1"	3"

* DESIGNED FOR 2500 PSI U.N.O. BUT SPECIFIED AS 3000 PSI FOR DURABILITY PURPOSES

3. SLABS-ON-GRADE HAVE BEEN DESIGNED IN ACCORDANCE WITH THE DESIGN OF SLABS ON GRADE" ACI 360. FLOOR SLABS SHALL BE CONSTRUCTED IN ACCORDANCE WITH THE "GUIDE FOR CONCRETE FLOOR AND SLAB CONSTRUCTION", ACI 302.1, "CONCRETE FLOORS ON GROUND", PORTLAND CEMENT ASSOCIATION, AND ACI 318.
4. CEMENT SHALL CONFORM TO ASTM C150, TYPE II. AGGREGATE PER ASTM C33. LIGHTWEIGHT AGGREGATE PER ASTM C330. DO NOT TAMP SLABS (USE ROLLER BUG, VIBRATING SCREED OR BULL FLOAT ONLY). PROVIDE AIR-ENTRAINING ADMIXTURE AT ALL EXPOSED CONCRETE AT A RATE ADEQUATE TO PROVIDE 5.0% AIR AT POINT OF PLACEMENT, TESTED IN ACCORDANCE WITH ASTM C233.
5. CONCRETE CONTAINING SUPERPLASTICIZING ADMIXTURE SHALL HAVE FIELD-VERIFIED 3" MAXIMUM SLUMP PRIOR TO ADDING ADMIXTURE AND 8" MAXIMUM SLUMP AT PLACEMENT. MIX DESIGNS SHALL BE DESIGNED BY THE CONCRETE PRODUCTION FACILITY IN ACCORDANCE WITH ACI 301 AND APPROVED BY THE STRUCTURAL ENGINEER PRIOR TO CONSTRUCTION. THE CONTRACTOR SHALL CONSIDER THE USE OF SUPERPLASTICIZER WHERE CONGESTION OF REBAR IS LIKELY TO CAUSE ROCK POCKETS OR VOIDS. THE CEMENT FOR THE MIX SHALL BE TYPE II. THE RATE OF PLACING SUCH CONCRETE SHALL BE REDUCED OR THE FORM STRENGTH SHALL BE INCREASED TO SAFELY RESIST INCREASED PRESSURE AGAINST THE FORMS. DO NOT USE WITH COLORED CONCRETE.
6. FIBER MESH REINFORCEMENT IN SLABS ON GRADE (IF USED) SHALL CONFORM TO ASTM C 1116, TYPE III, SYNTHETIC FIBERS OF 100 PERCENT VIRGIN POLYPROPYLENE FIBRILLATED FIBERS CONTAINING NO REPROCESSED OLEFIN MATERIALS; 70 KSI. PROVIDE MINIMUM OF 1.5 POUNDS OF FIBERS PER CUBIC YARD OF CONCRETE USED.
7. CONCRETE SHALL BE FREE OF CHLORIDE. FLY ASH ADDITIVES (WHEN USED) SHALL CONFORM TO ASTM C618, CLASS F. FLY ASH SHALL NOT REPLACE MORE THAN 18% OF CEMENT BY WEIGHT.
8. PROVIDE SLEEVES FOR UTILITY OPENINGS IN CONCRETE BEFORE PLACING CONCRETE. DO NOT CUT ANY CONFLICTING REINFORCING. CORING OR CUTTING CONCRETE IS NOT PERMITTED EXCEPT AS SHOWN. NOTIFY THE ARCHITECT IN ADVANCE OF CONDITIONS NOT SHOWN ON THE DRAWINGS. NO PIPES, CONDUITS, DUCT, ETC. SHALL BE PLACED IN CONCRETE COLUMNS, OR FOOTINGS UNLESS SPECIFICALLY DETAILED.
9. NO CONSTRUCTION JOINTS OTHER THAN THOSE SHOWN ON THE DRAWINGS SHALL BE INSTALLED WITHOUT APPROVAL OF THE ENGINEER. PROVIDE 3/4" CHAMFER AT ALL CORNERS, U.N.O.
10. CONCRETE SHALL NOT BE DROPPED MORE THAN FIVE FEET VERTICALLY WITHOUT USE OF TREMIES.

CAST-IN-PLACE CONCRETE (CONT.):

11. CONCRETE FOOTINGS AND PADS MAY BE POURED AGAINST NEAT EXCAVATIONS PROVIDED THE REQUIRED CONCRETE COVERAGE FOR REINFORCING IS MAINTAINED. CONCRETE WALLS AND COLUMNS SHALL BE DOWELED FROM SUPPORTS WITH BARS OF THE SAME SIZE AND SPACING. SEE 'REINFORCING STEEL" FOR LAP REQUIREMENTS.
12. OPENINGS, POCKETS, BLOCKOUTS, ETC. SHALL NOT BE PLACED IN CONCRETE SLABS, DECKS, BEAMS, JOISTS, COLUMNS, WALLS ETC. UNLESS SPECIFICALLY DETAILED ON THE STRUCTURAL DRAWINGS. NOTIFY THE STRUCTURAL ENGINEER WHEN DRAWINGS PREPARED BY OTHERS SHOW OPENINGS, POCKETS, BLOCKOUTS, ETC. THAT ARE NOT SHOWN ON THE STRUCTURAL DRAWINGS. DO NOT PROCEED UNTIL DIRECTED BY THE ENGINEER IN WRITING.
13. PROVIDE 1/2" PREFORMED JOINT FILLER WHERE EXTERIOR SLABS ABUT VERTICAL SURFACES, TYPICAL U.N.O. COORDINATE WITH ARCHITECT.
14. MECHANICALLY VIBRATE ALL CONCRETE WHEN PLACED, EXCEPT THAT SLABS ON GRADE NEED BE VIBRATED ONLY AROUND EMBEDDED ITEMS AND UNDERFLOOR DUCTS, ETC. CAST CLOSURE POUR AROUND COLUMNS AFTER COLUMN DEAD LOAD IS APPLIED.
15. CONCRETE, REMAINING IN MIXER, WHICH HAS CONTAINED WATER FOR MORE THAN 90 MINUTES (60 MINUTES IF AIR TEMPERATURE EXCEEDS 85°) SHALL NOT BE USED. RETEMPERING OF CONCRETE AFTER INITIAL SET HAS OCCURRED IS NOT PERMITTED.
16. CURE EXPOSED CONCRETE FOR A MINIMUM OF 7 DAYS IN ACCORDANCE WITH ACI 308, ACI 360 AND ACI 302.1 PROCEDURES IN ORDER TO PREVENT CRACKING. CURE WITH CURING AND SEALING COMPOUND, MOIST CURING, MOISTURE-RETAINING COVER CURING, OR COMBINATIONS THEREOF. IF CURING COMPOUND IS USED, APPLY AT A RATE SPECIFIED BY THE MANUFACTURER, BUT NOT LESS THAN I GALLON PER 200 SQUARE FEET OF SURFACE AREA.
17. CONCRETE COMPRESSIVE STRENGTH AND SLUMP SHALL BE TESTED PER ASTM C31, C39 AND C172 AND IN ACCORDANCE WITH IBC SECTION 1905. FOR EACH CLASS OF CONCRETE USED PROVIDE 4 CYLINDERS PER TEST FOR EACH DAY'S CONCRETE PLACEMENT NOR LESS THAN ONE TEST FOR EACH 50 CUBIC YARDS OF CONCRETE, NOR LESS THAN ONCE FOR EACH 5,000 SQUARE FEET OF SURFACE AREA FOR SLABS OR WALLS (NOTE: ALL CONCRETE EXCEPT CURBS AND SIDEWALKS SHALL BE TESTED). TEST ONE CYLINDER AT 7 DAYS AND TWO AT 28 DAYS, WITH ONE HELD. TESTING SHALL BE DONE BY A QUALIFIED TESTING LABORATORY.
18. ALL HOT WEATHER CONCRETING SHALL MEET THE REQUIREMENTS OF ACI 305; AND ACI 306 FOR COLD WEATHER CONCRETING.
19. PLAIN THREADED BARS SHALL BE ASTM A36 OR A307, GRADE A. ANCHOR RODS (ANCHOR BOLTS) SHALL BE ASTM F1554 GRADE 36 (Fy = 36 KSI). BOLTS, ANCHOR RODS, EXPANSION BOLTS, ETC., SHALL BE INSTALLED WITH STEEL WASHERS AND TIGHTENED NUTS.

REINFORCING STEEL:

1. REINFORCING STEEL SHALL CONFORM TO ASTM A615, GRADE 60 (Fy = 60 KSI) DEFORMED BARS FOR ALL BARS #5 AND LARGER. ASTM A615, GRADE 40 (Fy = 40 KSI) DEFORMED BARS FOR ALL BARS #4 AND SMALLER, EXCEPT #2 BARS SHALL BE SMOOTH. REINFORCING TO BE WELDED SHALL CONFORM TO ASTM A706, GRADE 60 (Fy = 60 KSI) LOW ALLOY DEFORMED BARS. WELDING OF REINFORCING SHALL BE ACCORDING TO AWS D1.4. NO TACK WELDING OF REINFORCING BARS ALLOWED.
2. ALL REINFORCING STEEL SHALL BE DETAILED, FABRICATED AND PLACED IN CONFORMANCE WITH THE CURRENT EDITIONS OF ACI 318 AND THE CRSI "MANUAL OF STANDARD PRACTICE FOR REINFORCED CONCRETE CONSTRUCTION", AND AS MODIFIED BY THE DRAWINGS. ALL REINFORCING BAR BENDS SHALL BE MADE COLD.
3. ALL REINFORCING STEEL SHALL BE ACCURATELY PLACED AND SUPPORTED BY GALVANIZED METAL CHAIRS, SPACERS OR HANGERS. PROVIDE THE FOLLOWING MINIMUM CLEAR CONCRETE COVERAGE:

CONDITION/LOCATION		SIZE	MINIMUM CLEAR CONCRETE COVERAGE
CAST AGAINST AND PERMANENTLY EXPOSED TO EARTH		ALL	3"
EXPOSED TO EARTH OR WEATHER		#6 AND LARGER	2"
		#5, W31 OR D31 AND SMALLER	1 1/2"
NOT EXPOSED TO EARTH OR WEATHER, OR IN CONSTANT CONTACT WITH THE GROUND	SLABS & WALLS	ALL	3/4"
	BEAMS & COLUMNS *	ALL	1 1/2"

* DISTANCE IS TO TIES, STIRRUPS, AND SPIRALS. ALL OTHERS PER CURRENT EDITION OF ACI 318

4. UNLESS NOTED OTHERWISE, LAP SPLICES IN CONCRETE SHALL BE PER THE TYPICAL DETAILS AND/OR PER THE CURRENT EDITION OF ACI 318. STAGGER ALTERNATE SPLICES A MINIMUM OF ONE LAP LENGTH. ALL SPLICE LOCATIONS ARE SUBJECT TO APPROVAL AND SHALL BE MADE ONLY WHERE INDICATED ON THE DRAWINGS. EXTEND ALL HORIZONTAL REINFORCING CONTINUOUS AROUND CORNERS AND INTERSECTIONS OR PROVIDE BENT CORNER BARS TO MATCH AND LAP WITH HORIZONTAL BARS AT CORNERS AND INTERSECTIONS OF FOOTINGS AND WALLS.
5. REINFORCING BAR SPACING GIVEN ARE MAXIMUM ON CENTERS. DOWEL ALL VERTICAL REINFORCING TO FOUNDATION. SKEW HOOKS AS REQUIRED FOR CONCRETE COVER. SECURELY TIE ALL BARS IN POSITION BEFORE PLACING CONCRETE. CONCRETE COLUMN DOWEL EMBEDMENT SHALL BE A STANDARD COMPRESSION DOWEL EMBEDMENT LENGTH PER THE TYPICAL DETAILS AND/OR THE CURRENT EDITION OF ACI 318. DOWELS BETWEEN FOOTINGS AND WALLS OR COLUMNS SHALL BE THE SAME GRADE, SIZE, SPACING AND NUMBER AS THE VERTICAL REINFORCING ABOVE.
6. SPLICED (LAPPED) BARS SHALL BE PLACED AT THE SAME EFFECTIVE DEPTH UNLESS NOTED OTHERWISE. REINFORCING BARS NOTED "CONTINUOUS" OR WITH LENGTH NOT SHOWN SHALL BE FULLY CONTINUOUS AND SPLICED ONLY AS SHOWN, OR WHERE APPROVED BY THE ENGINEER.
7. REINFORCING BAR HOOKS SHALL BE STANDARD ACI HOOKS UNLESS NOTED OTHERWISE.
8. WHERE REINFORCING IS SHOWN CONTINUOUS THROUGH CONSTRUCTION JOINTS, BD-SAE DOWEL BAR SPLICE DEVICES AS MANUFACTURED BY RICHMOND SCREW ANCHOR CO. (OR APPROVED EQUAL) MAY BE USED. SIZES AND TYPES SHALL BE SELECTED TO DEVELOP THE FULL TENSION STRENGTH OF THE BAR PER ICC RESEARCH RECOMMENDATION.
9. GENERAL CONTRACTOR SHALL NOTIFY THE ARCHITECT/ENGINEER TO OBSERVE COMPLETED FOOTING EXCAVATION AND ALL REINFORCING INSTALLATION BEFORE ANY CONCRETE IS PLACED.
10. CONTRACTOR SHALL PROVIDE 3% (OF TOTAL REINFORCING STEEL WEIGHT) OF ADDITIONAL REINFORCING STEEL TO BE PLACED AND LOCATED AT THE ENGINEER'S DISCRETION DURING CONSTRUCTION.

MASONRY:

1. MASONRY WORK SHALL CONFORM TO ALL REQUIREMENTS OF IBC CHAPTER 21 AND ACI 530, "BUILDING CODE REQUIREMENTS FOR MASONRY STRUCTURES", AND ACI 531, "BUILDING CODE REQUIREMENTS FOR CONCRETE MASONRY STRUCTURES". THE COMPRESSIVE STRENGTH SHALL BE DETERMINED BY THE UNIT STRENGTH METHOD AS SPECIFIED BELOW. PRISM TESTS MAY BE USED AS AN ALTERNATE METHOD IF REQUESTED BY THE CONTRACTOR IN WRITING.
2. HOLLOW CONCRETE MASONRY UNITS SHALL CONFORM TO ASTM C90, NORMAL WEIGHT, F'm = 1500 PSI, WITH A NET COMPRESSIVE STRENGTH OF 1900 PSI AS TESTED PER ASTM C140 (PROVIDE MATERIAL AND STRENGTH CERTIFICATES FROM BLOCK MANUFACTURER FOR EACH TYPE OF BLOCK, EACH PROJECT). PROVIDE RUNNING BOND UNLESS NOTED OTHERWISE. RADIUSED WALLS SHALL NOT BE STACKED BOND UNLESS SPECIFICALLY NOTED ON THE DRAWINGS.
3. MORTAR SHALL CONFORM TO ASTM C270, TYPE S WITH 28 DAY COMPRESSIVE STRENGTH OF 1800 PSI, AS TESTED PER ASTM C1314. MASONRY CEMENT, PRE-MIXED MORTAR AND RETARDANT ADDITIVES SHALL NOT BE USED (USE PORTLAND CEMENT PER ASTM C150 ONLY) UNLESS APPROVED IN WRITING BY THE ENGINEER.
4. GROUT SHALL CONFORM TO ASTM C476 AS TESTED PER ASTM C1019, FINE OR COARSE GROUT, WITH 28 DAY COMPRESSIVE STRENGTH OF 2000 PSI, TESTED PER ASTM C1019. USE SUFFICIENT WATER FOR GROUT TO HAVE AN 8" MIN/10" MAX SLUMP TO PROVIDE ADEQUATE FLUIDITY FOR PLACEMENT INTO ALL CELLS AND JOINTS WITHOUT SEGREGATION OF THE CONSTITUENTS, AND SHALL BE MIXED THOROUGHLY.
5. HORIZONTAL JOINT REINFORCING SHALL BE LADDER TYPE IN CMU WALLS WITH No. 9 GAGE WIRE CONFORMING TO ASTM A951. PROVIDE MINIMUM 12" LAPS AT ALL SPLICES.
6. SEE DETAILS AND NOTES ON DRAWINGS FOR SIZE AND SPACING OF REINFORCING BARS (IN NO CASE SHALL WALLS HAVE LESS THAN #5 VERTICAL BARS AT 48 INCHES O.C. IN 8" CMU WALL, AND #6 AT 48" O.C. IN 12" CMU WALLS) LAP SPLICES OF REINFORCING IN MASONRY AS NOTED BELOW, UNLESS NOTED OTHERWISE. TIE ALL VERTICAL BARS AT 5'-0" MAXIMUM VERTICALLY WITH SINGLE WIRE LOOP TIE BY A.A. PRODUCTS COMPANY. PROVIDE VERTICAL DOWELS FROM FOOTINGS CONTINUOUS THROUGH STEM WALLS INTO MASONRY ABOVE. DOWELS SHALL MATCH SIZE AND SPACING OF ALL VERTICAL REINFORCING. VERTICAL WALL REINFORCEMENT SHALL PENETRATE 6" MINIMUM INTO BOND BEAMS AT THE TOP OF WALLS. EXTEND ALL HORIZONTAL BOND BEAM REINFORCING IN MASONRY CONTINUOUS AROUND CORNERS AND INTERSECTIONS OR PROVIDE BENT CORNER BARS TO MATCH AND LAP HORIZONTAL BOND BEAM REINFORCING AT CORNERS AND INTERSECTIONS. ALL REINFORCING IN MASONRY SHALL BE ACCURATELY LOCATED PRIOR TO GROUTING AND THE POSITION MAINTAINED DURING GROUTING. MINIMUM LAP SPLICES IN MASONRY SHALL BE AS FOLLOWS:

   GRADE 40 BARS
   1 BAR/CELL 40 BAR DIAMETER
   2 BAR/CELL 52 BAR DIAMETER AT 8" CMU WALL
   2 BAR/CELL 40 BAR DIAMETER AT 12" CMU WALL

   GRADE 60 BARS
   1 BAR/CELL 48 BAR DIAMETER
   2 BAR/CELL 63 BAR DIAMETER AT 8" CMU WALL
   2 BAR/CELL 48 BAR DIAMETER AT 12" CMU WALL

7. ALL CELLS AND COURSES WITH REINFORCING AND ADDITIONAL GROUT SPACES AS REQUIRED BY THE DRAWINGS SHALL BE FILLED SOLID WITH GROUT. LIMIT MAXIMUM GROUT LIFT TO 5'-0" WITH EACH GROUT POUR STOPPING 1-1/2 INCHES BELOW THE TOP COURSE OF LIFT. PLACE GROUT CONTINUOUSLY. DO NOT INTERRUPT GROUTING FOR MORE THAN ONE HOUR. MECHANICALLY VIBRATE GROUT IN VERTICAL SPACES IMMEDIATELY AFTER POURING AND AGAIN ABOUT 5 MINUTES LATER. RODDING OF GROUT IS NOT ACCEPTABLE.
8. PROVIDE TEMPORARY BRACING AND SHORING FOR ALL MASONRY WALLS TO RESIST ALL LATERAL LOADS DURING CONSTRUCTION UNTIL THE MASONRY HAS BEEN PROPERLY ANCHORED TO THE BUILDING STRUCTURE AND HAS REACHED A THE SPECIFIED COMPRESSIVE STRENGTH. SHORE ALL HORIZONTAL MASONRY BEAMS AND LINTELS FOR 28 DAYS AFTER GROUTING OR UNTIL THE MASONRY REACHES THE SPECIFIED COMPRESSIVE STRENGTH PRIOR TO REMOVING THE SHORES AND BRACES.
9. UNLESS NOTED OTHERWISE ON THE DRAWINGS, PROVIDE VERTICAL MASONRY CONTROL JOINTS SUCH THAT NO STRAIGHT RUN OF WALL EXCEEDS 24'-0". COORDINATE LOCATIONS WITH ARCHITECT.
10. CONTRACTOR SHALL PROVIDE LINTELS AS REQUIRED AT ALL OPENINGS. REFER TO TYPICAL DETAILS AND LINTEL SCHEDULES. NOTE: ALL WALL OPENINGS MAY NOT BE SHOWN ON STRUCTURAL DRAWINGS REFER TO ARCHITECTURAL DRAWINGS. MECHANICAL AND ELECTRICAL DRAWINGS FOR ALL OPENINGS SIZE AND LOCATIONS.
11. QUALITY ASSURANCE:
    A. ALL MASONRY UNITS SHALL HAVE STRENGTH CERTIFICATES PROVIDED BY THE SUPPLIER PRIOR TO CONSTRUCTION, AND FOR EVERY 5000 SQUARE FEET DURING CONSTRUCTION. 3 SAMPLES PER MORTAR OR GROUT TEST. TEST ONE SAMPLE AT 7 DAYS AND TWO AT 28 DAYS. ALL TESTING DONE BY A QUALIFIED TESTING LABORATORY PER ASTM C1314.
    B. MORTAR SHALL BE TESTED FOR THE FIRST DAY'S WORK AND EVERY 3 DAYS THEREAFTER OR EVERY 5000 SQUARE FEET DURING CONSTRUCTION. PROVIDE 3 SAMPLES PER MORTAR TEST. TEST ONE SAMPLE AT 7 DAYS AND TWO AT 28 DAYS.
    C. GROUT SHALL BE TESTED FOR EVERY 5000 SQUARE FEET OF WALL, BUT NOT LESS THAN ONE TEST FOR EACH PROJECT. PROVIDE 4 SAMPLES PER GROUT TEST.
    D. ALL TESTING DONE BY A QUALIFIED TESTING LABORATORY.
12. ALL MASONRY CONSTRUCTION SHALL MEET THE REQUIREMENTS OF IBC SECTION 2104.3 FOR COLD WEATHER CONSTRUCTION (AMBIENT TEMPERATURE BELOW 40°F); AND SECTION 2104.4 FOR HOT WEATHER CONSTRUCTION (AMBIENT TEMPERATURE EXCEEDS 90°F).

NOTE:
THE ASSOCIATED CONCRETE FOOTING AND STEMWALL ALSO REQUIRE SPECIAL INSPECTION PRIOR TO PLACING ANY CONCRETE AND/OR GROUT.

STRUCTURAL STEEL:

1. STRUCTURAL STEEL CONSTRUCTION SHALL CONFORM WITH THE LATEST AISC "CODE OF STANDARD PRACTICE FOR STEEL BUILDING AND BRIDGES", AISC "SPECIFICATION FOR STRUCTURAL STEEL BUILDINGS, INCLUDING COMMENTARY, AND APPLICABLE PROVISIONS OF AWS "STRUCTURAL WELDING CODE". PARAGRAPH 4.2.1. OF THE AISC "CODE OF STANDARD PRACTICE FOR STEEL BUILDINGS AND BRIDGES" IS HEREBY MODIFIED BY DELETION OF THE FOLLOWING SENTENCE: "THIS APPROVAL CONSTITUTES THE OWNER'S ACCEPTANCE OF ALL RESPONSIBILITY FOR THE DESIGN ADEQUACY OF ANY DETAIL CONFIGURATION OF CONNECTIONS DEVELOPED BY THE FABRICATOR AS PART OF HIS PREPARATION OF THESE SHOP DRAWINGS."
2. STRUCTURAL MISCELLANEOUS SHAPES AND PLATES SHALL BE ASTM A36 (Fy = 36 KSI). STRUCTURAL WIDE FLANGE SHAPES ("W SECTIONS) SHALL BE ASTM A992 GRADE 50 (Fy = 50 KSI) HOLLOW STRUCTURAL SECTIONS (STRUCTURAL TUBE SHAPES; TS OR HSS) SHALL BE ASTM A500, GRADE B (Fy = 46 KSI).
3. BOLTS SHALL BE ASTM A325N OR A307 - COORDINATE WITH PLANS AND DETAILS. ALL HIGH-STRENGTH BOLTS (A325N) SHALL BE TIGHTENED TO THE SNUG-TIGHT CONDITION AS DEFINED BY AISC UNLESS NOTED OTHERWISE.
4. PLAIN THREADED BARS SHALL BE ASTM A36 OR A307, GRADE A. ANCHOR RODS (ANCHOR BOLTS) SHALL BE ASTM F1554 GRADE 36 (Fy = 36 KSI).
5. BOLTS, ANCHOR RODS, EXPANSION BOLTS, ETC., SHALL BE INSTALLED WITH STEEL WASHERS AND TIGHTENED NUTS.
6. WELDING ELECTRODES SHALL CONFORM TO AWS D1.1, GRADE E70XX. E90 SERIES ELECTRODES SHALL BE USED FOR ASTM A706 REINFORCING BARS. ALL WELDING SHALL BE DONE BY WELDERS HOLDING VALID CERTIFICATES ISSUED BY AN ACCEPTED TESTING AGENCY AND HAVING CURRENT EXPERIENCE IN TYPE OF WELDS SHOWN ON THE DRAWINGS OR NOTES. ALL WELDING PER AMERICAN WELDING SOCIETY STANDARDS. ALL WELDS ON DRAWINGS ARE SHOWN AS SHOP WELDS. CONTRACTOR MAY SHOP WELD OR FIELD WELD AT THEIR DISCRETION. SHOP WELDS OR FIELD WELDS SHALL BE SHOWN ON SHOP DRAWINGS. ALL WELDS REQUIRE SPECIAL INSPECTIONS AND SHALL BE TESTED AND CERTIFIED BY AN INDEPENDENT TESTING LABORATORY. ALL COMPLETE JOINT PENETRATION WELDS SHALL HAVE ULTRASONIC TESTING (UT) AS PERFORMED BY A CERTIFIED TESTING INSPECTION LABORATORY.
7. HEADED STUDS SHALL BE NELSON GRANULAR FLUX-FILLED HEADED ANCHOR STUDS OR APPROVED EQUAL MADE FROM COLD FINISHED LOW CARBON STEEL, AND SHALL CONFORM TO ASTM A108, GRADES 1015 OR 1020 WITH A MINIMUM TENSILE STRENGTH OF 60,000 PSI. STUD WELDING INSPECTION AND TESTING SHALL CONFORM TO AWS D1.1.
8. DEFORMED BAR ANCHOR STUDS SHALL BE NELSON D2L ASTM A-496 GRANULAR FLUX-FILLED REBAR STUDS OR APPROVED EQUAL MADE FROM LOW CARBON COLD ROLLED STEEL WITH A MINIMUM TENSILE STRENGTH OF 70,000 PSI. STUD WELDING INSPECTION AND TESTING SHALL CONFORM TO AWS D1.1.
9. DRYPACK FOR COLUMN BASE PLATES AND BEARING PLATES SHALL BE FIVE STAR GROUT OR AN EQUAL NONMETALLIC SHRINKAGE-RESISTANT GROUT WITH MINIMUM 28 DAY COMPRESSIVE STRENGTH OF 5000 PSI.
10. PROVIDE FABRICATOR'S STANDARD RUST-INHIBITING PRIMER SHOP PAINT FOR ALL STEEL SURFACES THAT WOULD BE EXPOSED TO WEATHER AT ITS FINAL INSTALLATION. SURFACES PERMANENTLY PROTECTED FROM THE WEATHER, ENCASED IN CONCRETE, OR TO RECEIVE SPRAY-APPLIED FIREPROOFING SHALL NOT BE SHOP PAINTED.
11. IF NOT NOTED OR REFERENCED ON THE DRAWINGS/DETAILS PROVIDE 1/8" WELDED CAP PLATE AT ALL EXTERIOR EXPOSED ENDS FOR TUBES AND PIPES.
12. CONTRACTOR SHALL PROVIDE 2% (OF TOTAL STEEL WEIGHT) OF ADDITIONAL MISCELLANEOUS STRUCTURAL STEEL TO BE PLACED AND LOCATED AT THE ENGINEER'S DISCRETION DURING CONSTRUCTION.

ROUGH CARPENTRY AND PLYWOOD:

1. WOOD FRAMING SHALL CONFORM TO IBC CHAPTER 23.
2. FRAMING LUMBER SHALL COMPLY WITH THE MOST CURRENT EDITION OF THE NATIONAL DESIGN SPECIFICATION (NDS). ALL SAWN LUMBER SHALL BE STAMPED WITH THE GRADE MARK OF A LUMBER GRADING AGENCY CERTIFIED BY THE AMERICAN LUMBER STANDARDS COMMITTEE. MAXIMUM MOISTURE CONTENT SHALL NOT EXCEED 19%. ALL SAWN LUMBER SHALL BE VISUALLY GRADED, DOUGLAS FIR-LARCH (D.F.). 2X AND 3X MEMBERS SHALL BE D.F. #2 AND 4X MEMBERS AND GREATER SIZES SHALL BE D.F. #1 WITH DESIGN VALUES PER THE NDS.
3. ALL PLYWOOD SHALL CONFORM TO CURRENT PRODUCT STANDARD PS1, OR APA PRP-108 AND HAVE AN EXTERIOR OR EXPOSURE 1 DURABILITY CLASSIFICATION, AND SHALL BEAR THE STAMP OF AN ICC APPROVED TESTING AGENCY. LAY UP SHEETS WITH LONG DIMENSION PERPENDICULAR TO SUPPORTS AND STAGGER JOINTS. ON ROOFS WHERE PLYWOOD IS LAID UP WITH THE LONG DIMENSION PARALLEL TO SUPPORTS, USE A MINIMUM OF 5-PLY PLYWOOD. AT ROOFS, USE PLYCLIPS AT MIDSPAN OF UNSUPPORTED EDGES. AT WALLS, PROVIDE 2 X WOOD BLOCKING AT ALL UNSUPPORTED EDGES. ALL NAILING SHALL BE WITH COMMON NAILS. ALL PLYWOOD SHALL BE OF THE FOLLOWING MINIMUM THICKNESS, SPAN/INDEX RATIO, AND SHALL BE NAILED AS FOLLOWS:

USE	THICKNESS	SPAN/INDEX RATIO	EDGE NAILING	FIELD NAILING
ROOF	5/8" (19/32")	24/0	8d AT 6" O.C.	8d AT 12" O.C.

4. APA RATED SHEATHING (ORIENTED STRAND BOARD) CONFORMING TO NER-108 AND CURRENT PRODUCT STANDARD (PS2), AND WITH THE SAME EXPOSURE DURABILITY CLASSIFICATION, NOMINAL THICKNESS, AND SPAN/INDEX RATIO MAY BE SUBSTITUTED FOR PLYWOOD UNLESS NOT ALLOWED DUE TO ROOFING REQUIREMENTS; FIRE RATING REQUIREMENTS; ARCHITECTURAL SPECIFICATIONS, ETC.
5. ALL NAILING SHALL BE WITH COMMON NAILS. DOUBLE UP JOISTS BELOW MECHANICAL EQUIPMENT. PROVIDE 2 X SOLID BLOCKING AT 8'-0" MAXIMUM O.C. AND AT SUPPORTS OF ALL 2 X JOISTS. PROVIDE DOUBLE OR MORE STUDS AT JAMBS AND UNDER BEAMS IN BEARING WALLS. PROVIDE 2 X BLOCKING AT MID-HEIGHT OF BEARING STUD WALLS (5'-0" MAXIMUM O.C.). U.N.O. ALL NAILING NOT NOTED SHALL BE ACCORDING TO TABLE 2304.9.1 OF THE INTERNATIONAL BUILDING CODE.
6. DO NOT NOTCH, DRILL OR SPLICE JOISTS, BEAMS, POSTS, OR LOAD BEARING STRUCTURAL STUDS WITHOUT PRIOR APPROVAL OF STRUCTURAL ENGINEER.
7. JOIST HANGERS AND OTHER MISCELLANEOUS FRAMING ANCHORS SHALL BE AS MANUFACTURED BY THE SIMPSON STRONG-TIE COMPANY OR EQUAL BY OTHER MANUFACTURER WITH CURRENT ICC OR CABO APPROVAL. MULTIPLE, SKEWED AND/OR SLOPED HANGERS SHALL BE SUPPLIED BY THE CONTRACTOR WHERE NECESSARY. ALL NAIL HOLES IN JOIST HANGERS AND MISCELLANEOUS FRAMING ANCHORS SHALL BE FILLED WITH NAILS OF THE LARGEST SIZE SHOWN IN THE MANUFACTURER'S LATEST CATALOG. ALL BOLTS USED IN CONNECTIONS SHALL BE INSTALLED WITH STEEL WASHERS AND TIGHTENED NUTS.
8. SIZE AND SPACING OF WOOD STUD WALLS SHALL BE PER PLANS AND/OR DETAILS. SILL PLATE ANCHOR BOLTS SHALL BE 1/2" DIAMETER PLACED NOT TO EXCEED 4'-0" O.C. UNLESS NOTED OTHERWISE. ANCHOR BOLTS SHALL BE PLACED 4" TO 8" OF ALL JAMBS, CORNERS, INTERSECTIONS AND WALL ENDS. ALL BOTTOM PLATES SHALL HAVE A MINIMUM OF 2 ANCHOR BOLTS. ALL BOTTOM PLATES OR SILLS ON CONCRETE SLABS ON GRADE AND ON CONCRETE OR MASONRY FOUNDATIONS, SHALL BE PRESSURE TREATED WOOD STAMPED BY AN APPROVED AGENCY.

ROUGH CARPENTRY AND PLYWOOD(CONT.):

9. PRESERVATIVE TREATMENT. WOOD MATERIALS REQUIRED TO BE "TREATED WOOD" IN ACCORDANCE WITH IBC SECTION 2304.11. PROTECTION AGAINST DECAY AND TERMITES SHALL CONFORM TO THE APPROPRIATE STANDARDS OF THE AMERICAN WOOD-PRESERVERS ASSOCIATION (AWPA) FOR SAWN LUMBER, GLUED LAMINATED TIMBER, ROUND POLES, WOOD PILES AND MARINE PILES. FOLLOW AMERICAN LUMBER STANDARDS COMMITTEE (ALSC) QUALITY ASSURANCE PROCEDURES. PRODUCTS SHALL BEAR THE APPROPRIATE MARK. FIRE RETARDANT TREATED LUMBER SHALL AFFORD THE FIRE-RESISTANCE RATING REQUIRED IN CHAPTER 6 OF THE IBC.

PREFABRICATED WOOD "I" JOISTS:

1. JOIST SIZES ARE INDICATED ON PLANS AND SCHEDULES. AN EXAMPLE OF A CALL-OUT IN THE JOIST SCHEDULE IS:

18" WOOD "I" JOIST 70/40	18" INDICATES JOIST DEPTH 70 INDICATES TOTAL LOAD (PLF) 40 INDICATES LIVE LOAD (PLF)

NOTE:
THE LOADS ABOVE DO NOT INCLUDE SPECIAL OR ADDITIONAL LOADS CALLED OUT ON PLANS OR IN SCHEDULES.

2. THE JOIST MANUFACTURER SHALL BE RESPONSIBLE FOR THE COMPLETE DESIGN, FABRICATION AND ERECTION PROCEDURES FOR ALL JOISTS, JOIST HANGERS, WOOD OR METAL BRIDGING, BLOCKING PANELS, WEB STIFFENERS, INCIDENTAL FRAMING, FRAMING FOR OPENINGS NOT SHOWN ON DRAWINGS, TEMPORARY AND PERMANENT BRACING AND BRIDGING, CONNECTIONS, HOLDOWN ANCHORS, AND ALL OTHER ITEMS REQUIRED FOR A COMPLETE AND SAFE INSTALLATION OF THE JOIST SYSTEM. JOIST DEPTH ARE INDICATED ON THE DRAWINGS.
3. JOISTS SHALL HAVE CURRENT CABO OR ICC APPROVAL. DESIGN, FABRICATION AND ERECTION IN ACCORDANCE WITH THE APPLICABLE CABO OR ICC REPORT. DEAD COMBINED WITH LIVE LOAD DEFLECTIONS SHALL BE LIMITED TO SPAN/240 AND SPAN/120 AT CANTILEVERED MEMBERS. LIVE LOAD DEFLECTIONS OF MEMBERS SHALL BE LIMITED TO SPAN/360 AND SPAN/180 AT CANTILEVERED MEMBERS. JOIST DURATION FACTOR SHALL BE PER THE MOST CURRENT EDITION OF THE NDS.
4. CONTRACTOR SHALL SUBMIT DESIGN CALCULATIONS AND SHOP DRAWINGS SEALED BY A CIVIL OR STRUCTURAL ENGINEER REGISTERED IN THE STATE OF THE LOCAL JURISDICTION FOR REVIEW PRIOR TO MANUFACTURE. CALCULATIONS AND SHOP DRAWINGS SHALL INCLUDE BUT NOT BE LIMITED TO DESIGN LOADS, ALLOWABLE STRESSES, STRESS DIAGRAMS, SPECIAL BEARING OR CONNECTION DETAILS AND ERECTION DRAWINGS. IN REVIEWING SHOP DRAWINGS THE ENGINEER WILL REVIEW FOR GENERAL CONFORMANCE TO THE INTENT OF THE PLANS. THIS REVIEW IN NO WAY RELIEVES THE CONTRACTOR OF HIS RESPONSIBILITY TO COMPLY WITH THE DRAWINGS AND SPECIFICATIONS, AND TO PROVIDE A COMPLETE JOIST SYSTEM AND WORKABLE INSTALLATION.
5. ADDITIONAL JOISTS SHALL BE DESIGNED AND SUPPLIED AS REQUIRED TO SUPPORT MECHANICAL EQUIPMENT, PIPING, DUCTS, ETC..
6. ALL CONNECTORS SPECIFIED BY THE MANUFACTURER SHALL HAVE CURRENT ICC OR CABO APPROVAL. MANUFACTURER SHALL SUPPLY MULTIPLE, SKEWED AND/OR SLOPED AND SPECIALTY JOIST HANGERS AS NECESSARY.
7. PRE-ENGINEERED FLAT WOOD TRUSSES (GANG-NAIL) ARE NOT AN ACCEPTABLE EQUIVALENT OPTION AND WILL NOT BE APPROVED AS A SUBSTITUTE TO WOOD "I" JOISTS.

STRUCTURAL NOTES CONTINUED ON SHEET S1-1.1

HUNT & CARAWA
Architects, ltd.
7145 North 57th Drive
Glendale, Arizona 85301
Voice (623) 934-4090 Fax (623) 934-4501

Arizona Army National Guard
Silverbell Fire Station 361
For
AZ Department of Emergency and Military Affairs

STRUCTURAL NOTES

Revisions:

Drawn by: SG
Checked by: JG
Scale:
Date: 8/17/06

Registered Professional Engineer (Structural) Certificate No. 19300 JOHN E. GRENIER Date Signed 8-17-06 ARIZONA U.S.A.

Grenier Engineering, Inc.
Structural and Civil Engineering Consultants
PROJECT NO. GE 06202
4515 S. McClintock Dr. #211 TEMPE, ARIZONA 85282 TEL: (480) 831-1170 FAX: (480) 831-1136

THIS DRAWING IS NOT TO BE USED FOR CONSTRUCTION PURPOSES UNTIL SEALED AND SIGNED BY ENGINEER OF RECORD. REUSE OR REPRODUCTION WITHOUT WRITTEN PERMISSION IS PROHIBITED. ©

JOB #
06-002

SHEET
S1-1.0

STRUCTURAL NOTES

(SEE PROJECT SPECIFICATION FOR ADDITIONAL REQUIREMENTS)

PREFABRICATED WOOD CHORD/STEEL WEB JOISTS:

1. JOIST SIZES ARE INDICATED ON PLANS AND SCHEDULES. AN EXAMPLE OF A CALLOUT IN THE JOIST SCHEDULE IS:

24" WOOD CHORD / STEEL WEB JOIST – 80/40	24" INDICATES JOIST DEPTH 80 INDICATES TOTAL LOAD (PLF) 40 INDICATES LIVE LOAD (PLF)

2. THE JOIST MANUFACTURER SHALL BE RESPONSIBLE FOR THE COMPLETE DESIGN, FABRICATION AND ERECTION PROCEDURES FOR ALL JOISTS, WOOD OR METAL BRIDGING, BLOCKING, STRUT BRACING, INCIDENTAL FRAMING, FRAMING FOR OPENINGS NOT SHOWN ON DRAWINGS, TEMPORARY AND PERMANENT BRACING AND BRIDGING, CONNECTIONS, END CONNECTIONS, HOLDOWN ANCHORS, AND ALL OTHER ITEMS REQUIRED FOR A COMPLETE AND SAFE INSTALLATION OF THE JOIST SYSTEM. JOIST DEPTHS ARE INDICATED ON THE DRAWINGS.
3. JOISTS SHALL HAVE CURRENT CABO OR ICC APPROVAL. DESIGN, FABRICATION AND ERECTION IN ACCORDANCE WITH THE APPLICABLE CABO OR ICC REPORT. CONNECTIONS AND BEARING MATERIAL TO BE SHOP CONNECTED TO JOISTS AND DESIGNED AND FURNISHED BY JOIST FABRICATOR. DEAD COMBINED WITH LIVE LOAD DEFLECTIONS SHALL BE LIMITED TO SPAN/240 AND SPAN/120 AT CANTILEVERED MEMBERS. LIVE LOAD DEFLECTIONS OF MEMBERS SHALL BE LIMITED TO SPAN/360 AND SPAN/180 AT CANTILEVERED MEMBERS. TRUSS DURATION FACTOR SHALL BE PER THE MOST CURRENT EDITION OF THE NDS.
4. CONTRACTOR SHALL SUBMIT DESIGN CALCULATIONS AND SHOP DRAWINGS BY A CIVIL OR STRUCTURAL ENGINEER REGISTERED IN THE STATE OF THE LOCAL JURISDICTION FOR REVIEW PRIOR TO MANUFACTURE. CALCULATIONS AND SHOP DRAWINGS SHALL INCLUDE BUT NOT BE LIMITED TO DESIGN LOADS, ALLOWABLE STRESSES, STRESS DIAGRAMS, SPECIAL BEARING OR CONNECTION DETAILS AND ERECTION DRAWINGS. IN REVIEWING SHOP DRAWINGS THE ENGINEER WILL REVIEW FOR GENERAL CONFORMANCE TO THE INTENT OF THE PLANS. THIS REVIEW IN NO WAY RELIEVES THE CONTRACTOR OF HIS RESPONSIBILITY TO COMPLY WITH THE DRAWINGS AND SPECIFICATIONS, AND TO PROVIDE A COMPLETE JOIST SYSTEM AND WORKABLE INSTALLATION.
5. ADDITIONAL JOISTS SHALL BE DESIGNED AND SUPPLIED AS REQUIRED TO SUPPORT MECHANICAL EQUIPMENT, PIPING, DUCTS, ETC.
6. CONTRACTOR MAY SUBSTITUTE JOISTS HAVING DIFFERENT END CONFIGURATIONS THAN SHOWN IN DETAILS. SUCH SUBSTITUTION REQUESTS SHALL BE SUBMITTED FOR PRIOR APPROVAL DURING THE BID PROCESS. CONTRACTOR SHALL BE RESPONSIBLE FOR COORDINATION OF ALL DETAIL CHANGES. SHOP DRAWINGS SHALL INDICATE ALL DETAIL CHANGES REQUIRED.
7. ALL CONNECTORS SPECIFIED BY THE MANUFACTURER SHALL HAVE CURRENT ICC OR CABO APPROVAL.

COLD–FORMED STEEL FRAMING:

1. ALL COLD–FORMED STEEL FRAMING SHALL BE FABRICATED AND ERECTED IN ACCORDANCE WITH THE MANUFACTURER'S RECOMMENDATIONS AND IN ACCORDANCE WITH THE CURRENT EDITION OF THE "SPECIFICATION FOR THE DESIGN OF COLD–FORMED STEEL STRUCTURAL MEMBERS" BY THE AMERICAN IRON AND STEEL INSTITUTE.
2. PAINTED 12, 14 AND 16 GAGE STUDS AND JOISTS, AND DIAGONAL TENSION STRAPS SHALL CONFORM TO ASTM A1008, GRADE 50, WITH A MINIMUM YIELD STRENGTH OF 50,000 PSI.
3. PAINTED 18 AND 20 GAGE STUDS, TRACK AND JOISTS, AND ALL PAINTED TRACK, BRIDGING AND ACCESSORIES SHALL CONFORM TO ASTM A1003, GRADE C, WITH A MINIMUM YIELD STRENGTH OF 33,000 PSI.
4. GALVANIZED 12, 14 AND 16 GAGE STUDS AND JOISTS SHALL CONFORM TO ASTM A653, GRADE D, WITH A MINIMUM YIELD STRENGTH OF 50,000 PSI.
5. GALVANIZED 18 AND 20 GAGE STUDS AND JOISTS AND ALL GALVANIZED TRACK, BRIDGING AND ACCESSORIES SHALL CONFORM TO ASTM A653, WITH A MINIMUM YIELD STRENGTH OF 33,000 PSI.
6. STUDS, JOISTS AND ACCESSORIES SHALL BE PRIMED WITH RUST–INHIBITIVE PAINT MEETING THE PERFORMANCE REQUIREMENTS OF TT–P–636C. STEEL SHALL BE GALVANIZED PER ASTM A653, G60 AT LOCATIONS EXPOSED TO WEATHER AND WHEREVER NOTED ON THE DRAWINGS.
7. STUDS OR JOISTS SHALL NOT BE SPLICED WITHOUT PRIOR APPROVAL OF STRUCTURAL ENGINEER.
8. STEEL STUD CONSTRUCTION FOR NON–BEARING CURTAIN WALL SYSTEMS SHALL HAVE VERTICAL SLIP CONNECTIONS AS DETAILED AND SHOWN ON THE SHOP DRAWINGS. DO NOT ATTACH THE STUDS TO THE STRUCTURE IN ANY WAY THAT WOULD PREVENT THE FRAMING FROM DEFLECTING UNDER SUPERIMPOSED LOADS. THE VERTICAL SIDE CLIPS SHALL HAVE A RATED CAPACITY (BY THE MANUFACTURER)OF 200 LBS LATERAL LOAD RESISTANCE.
9. UNLESS NOTED OTHERWISE, AT STEEL STUD BEARING SYSTEMS PROVIDE DOUBLE STUDS AT ALL JAMBS, CORNERS, INTERSECTIONS BEAM BEARINGS AND JOIST BEARINGS. DOUBLE UP JOISTS BELOW PARTITIONS AND AROUND ALL FLOOR AND ROOF OPENINGS WHICH INTERRUPT ONE OR MORE MEMBERS UNLESS NOTED OTHERWISE. BEARING STEEL STUD WALLS SHALL BE BRACED WITH TEMPORARY OR PERMANENT SHEATHING PRIOR TO APPLICATION OF FLOOR OR ROOF DEAD LOADS.
10. BRIDGING SHALL BE INSTALLED PER MANUFACTURER'S RECOMMENDATIONS WITH THE FOLLOWING MINIMUM REQUIREMENTS: PROVIDE BRIDGING AT 4'–0" O.C. MAXIMUM. IN ADDITION, BRIDGING SHALL BE PROVIDED AT ROOF LINES, FLOOR LINES, AND ELSEWHERE AS NOTED ON DRAWINGS. SOLID BLOCKING SHALL BE INSTALLED IN LIEU OF BRIDGING WHERE NOTED ON THE DRAWINGS.
11. GAGE AND SPACING OF STEEL STUD WALLS SHALL BE PER PLANS AND/OR DETAILS. BOTTOM TRACK ANCHORS SHALL BE PER DETAILS BUT PLACED NOT TO EXCEED 4'–0" O.C. UNLESS NOTED OTHERWISE. ANCHORS SHALL BE PLACED WITHIN 8" OF ALL JAMBS, CORNERS, INTERSECTIONS AND WALL ENDS. ALL BOTTOM TRACKS SHALL HAVE A MINIMUM OF 2 ANCHORS.
12. ALL WELDING SHALL BE PERFORMED BY WELDERS EXPERIENCED IN LIGHT GAGE STEEL FRAMING WORK.
13. COLD–FORMED MEMBERS SHALL HAVE THE FOLLOWING MINIMUM EFFECTIVE PROPERTIES (PROPERTIES PER STEEL STUD MANUFACTURERS ASSOCIATION (SSMA):
(NOTE: ALL OF THE MEMBERS LISTED BELOW MAY OR MAY NOT BE USED ON THIS PROJECT. COORDINATE WITH SCHEDULES AND DETAILS)

COMPONENT	Ix (IN4)	Sx (IN3)	FLANGE WIDTH
STUD 6" X 18 GAGE	2.316	0.767	1 5/8"
TRACK 6" X 18 GAGE	1.750	0.515	1 1/4"
LINTEL (UNPUNCHED) 6" X 18 GA.	2.683	0.894	2"

GLULAM BEAMS:

1. GLULAM BEAMS SHALL BE DOUGLAS FIR–LARCH WITH THE FOLLOWING MINIMUM PROPERTIES:

   Fb = 2400 PSI
   Fv = 165 PSI Fc (PERPENDICULAR) = 650 PSI
   E = 1,500,000 PSI.
   BEAMS CANTILEVERING OVER SUPPORTS SHALL HAVE THE SPECIFIED MINIMUM PROPERTIES TOP AND BOTTOM.

2. FABRICATION AND HANDLING PER THE LATEST AMERICAN INSTITUTE OF TIMBER CONSTRUCTION (AITC) STANDARDS. ALL BEAMS SHALL BEAR AITC STAMP AND CERTIFICATE AND GRADE STAMP. ALL BEAMS SHALL BE FABRICATED WITH WATERPROOF GLUE. APPEARANCE GRADE REQUIREMENTS SHALL BE AS SHOWN ON THE ARCHITECTURAL DRAWINGS.
3. CAMBER BEAMS AS SHOWN ON THE DRAWINGS. IF NO CAMBER IS SPECIFIED, PROVIDE MANUFACTURER'S STANDARD CAMBER USING A RADIUS OF 2000 FEET.
4. ALL BOLTS USED AT CONNECTIONS OF GLULAM BEAMS SHALL HAVE STEEL WASHERS AND TIGHTENED NUTS.

STRUCTURAL TESTS AND SPECIAL INSPECTIONS:

1. SPECIAL INSPECTIONS SHALL BE PERFORMED AS REQUIRED BY AND IN ACCORDANCE WITH IBC CHAPTER 17.
2. THE SPECIAL INSPECTOR SHALL BE A QUALIFIED PERSON, APPROVED BY THE LOCAL BUILDING OFFICIAL, FOR THE INSPECTION OF THE PARTICULAR TYPE OF CONSTRUCTION OR OPERATION REQUIRING SPECIAL INSPECTION.
3. THE SPECIAL INSPECTOR SHALL BE EMPLOYED BY THE OWNER, THE ENGINEER OR ARCHITECT OF RECORD, OR AN AGENT OF THE OWNER, BUT NOT THE CONTRACTOR OR ANY OTHER PERSON RESPONSIBLE FOR THE WORK.
4. THE SPECIAL INSPECTION CERTIFICATE SHALL BE SIGNED AND SEALED BY THE PROJECT'S SUPERVISING STRUCTURAL OR CIVIL ENGINEER REGISTERED IN THE STATE OF THE LOCAL JURISDICTION.
5. THE CONTRACTOR SHALL BE RESPONSIBLE FOR PROVIDING A MINIMUM OF 24 HOURS NOTICE TO THE SPECIAL INSPECTOR AND THE TESTING LABORATORY PRIOR TO BEGINNING ANY WORK FOR WHICH SPECIAL INSPECTION OR TESTING IS REQUIRED.
6. THE SPECIAL INSPECTOR IS NOT AUTHORIZED TO STOP OR DELAY ANY WORK. IF THE CONTRACTOR ELECTS TO CONTINUE WITH A CERTAIN WORK AFTER BEING NOTIFIED BY THE SPECIAL INSPECTOR THAT SUCH WORK IS UNACCEPTABLE, THE CONTRACTOR DOES SO AT THEIR OWN RESPONSIBILITY, AND RISKS CORRECTING THE WORK AT A LESS OPPORTUNE TIME.
7. THE SPECIAL INSPECTOR IS NOT INSPECTING FOR OSHA COMPLIANCE AND TEMPORARY CONSTRUCTION, SUCH AS BRACING, OR ANY SAFETY RELATED ITEMS. THE CONTRACTOR IS RESPONSIBLE FOR PROVIDING ADEQUATE FACILITIES FOR THE STRUCTURAL INSPECTOR, TO ALLOW THE INSPECTOR TO PERFORM THEIR WORK SAFELY, AND EFFICIENTLY.
8. SPECIAL INSPECTION IS REQUIRED FOR THE ITEMS LISTED IN "STRUCTURAL TESTS AND INSPECTIONS" TABLE AND SHALL BE PERFORMED PER IBC SECTION 1704.
9. DUTIES AND RESPONSIBILITIES OF THE SPECIAL INSPECTOR:
   A. THE SPECIAL INSPECTOR SHALL OBSERVE THE WORK REQUIRED TO BE SPECIAL INSPECTED FOR CONFORMANCE WITH THE APPROVED DESIGN DRAWINGS AND SPECIFICATIONS.
   B. ALL DISCREPANCIES SHALL BE BROUGHT TO THE IMMEDIATE ATTENTION OF THE CONTRACTOR FOR CORRECTION, THEN, IF UNCORRECTED, TO THE ENGINEER OR ARCHITECT OF RECORD AND THE BUILDING OFFICIAL.
   C. THE SPECIAL INSPECTOR SHALL FURNISH INSPECTION REPORTS TO THE BUILDING OFFICIAL AND TO THE ENGINEER OR ARCHITECT OF RECORD.
   D. UPON COMPLETION OF THE ASSIGNED WORK, THE SPECIAL INSPECTOR SHALL COMPLETE AND SIGN A FINAL REPORT CERTIFYING THAT TO THE BEST OF THE INSPECTOR'S KNOWLEDGE, THE WORK IS IN CONFORMANCE WITH THE APPROVED PLANS AND SPECIFICATIONS, AND THE APPLICABLE WORKMANSHIP PROVISIONS OF THE CODE.
10. SPECIAL INSPECTION IS NOT A SUBSTITUTE FOR INSPECTION BY THE BUILDING OFFICIAL'S INSPECTOR. ALL WORK REQUIRING SPECIAL INSPECTION WHICH IS INSTALLED OR COVERED WITHOUT APPROVAL OF THE BUILDING OFFICIAL'S INSPECTOR IS SUBJECT TO REMOVAL.

SHOP DRAWINGS AND DEFERRED SUBMITTALS:

1. SHOP DRAWINGS SHALL BE SUBMITTED FOR ALL STRUCTURAL ITEMS IN ADDITION TO ANY ITEMS REQUIRED BY THE ARCHITECTURAL SPECIFICATIONS. CONSTRUCTION DOCUMENTS SHALL NOT BE REPRODUCED FOR USE AS SHOP DRAWINGS.
2. THE GENERAL CONTRACTOR SHALL REVIEW AND STAMP ALL SHOP DRAWINGS AND PRODUCT DATA FOR CONFORMANCE WITH THE CONSTRUCTION DOCUMENTS PRIOR TO SUBMITTAL. ANY SHOP DRAWINGS OR PRODUCT DATA NOT REVIEWED AND STAMPED BY THE GENERAL CONTRACTOR WILL BE RETURNED WITHOUT REVIEW. THE CONTRACTOR SHALL CLOUD OR FLAG ALL ITEMS NOT IN ACCORDANCE WITH THE CONTRACT DOCUMENTS. VERIFY ALL DIMENSIONS WITH ARCHITECT.
3. ANY CHANGES, SUBSTITUTIONS, OR DEVIATIONS FROM THE ORIGINAL CONTRACT DRAWINGS SHALL BE CLOUDED BY THE MANUFACTURER OR FABRICATOR. ANY CHANGES, SUBSTITUTIONS, OR DEVIATIONS WHICH ARE NOT CLOUDED OR FLAGGED BY SUBMITTING PARTIES, SHALL NOT BE CONSIDERED ALLOWED AFTER THE ENGINEER'S REVIEW, UNLESS NOTED ACCORDINGLY BY THE STRUCTURAL ENGINEER.
4. THE STRUCTURAL ENGINEER RESERVES THE RIGHT TO ALLOW OR NOT ALLOW ANY CHANGES TO THE ORIGINAL CONTRACT DRAWINGS AT ANY TIME BEFORE OR AFTER SHOP DRAWING REVIEW.
5. THE SHOP DRAWINGS DO NOT REPLACE THE ORIGINAL CONTRACT DRAWINGS. ITEMS OMITTED OR SHOWN INCORRECTLY AND WHICH ARE NOT NOTED AS ALLOWED BY THE STRUCTURAL ENGINEER OR ARCHITECT ARE NOT TO BE CONSIDERED CHANGES TO THE ORIGINAL CONTRACT DRAWINGS. IT IS THE CONTRACTOR'S RESPONSIBILITY TO ENSURE THAT ITEMS OMITTED OR SHOWN INCORRECTLY ARE CONSTRUCTED IN ACCORDANCE WITH THE ORIGINAL CONTRACT DRAWINGS.
6. ALL ENGINEERING DESIGNS AND LAYOUTS PERFORMED BY OTHERS SHALL BE SEALED BY A CIVIL OR STRUCTURAL ENGINEER REGISTERED IN THE STATE OF THE LOCAL JURISDICTION.
7. REVIEWING IS INTENDED ONLY AS AN AID TO THE CONTRACTOR IN OBTAINING CORRECT SHOP DRAWINGS. RESPONSIBILITY FOR CORRECTNESS AND COMPLETENESS RESTS SOLELY WITH THE CONTRACTOR.
8. SHOP DRAWINGS WILL BE RETURNED FOR RESUBMITTAL IF MAJOR ERRORS ARE FOUND DURING REVIEW.
9. NO MORE THAN TWO SETS OF BLUELINE PRINTS AND ONE SET OF REPRODUCIBLES SHALL BE REVIEWED FOR ANY INDIVIDUAL SUBMITTAL.
10. ALLOW A MINIMUM OF FIVE WORKING DAYS FOR REVIEW OF SHOP DRAWINGS BY THE STRUCTURAL ENGINEER.
11. DEFERRED SUBMITTALS – SHOP DRAWING SUBMITTALS THAT ARE SUBMITTED DURING CONSTRUCTION AND REQUIRED BY THE GENERAL STRUCTURAL NOTES WHICH CONTAIN DESIGN CALCULATIONS AND SEALS BY A REGISTERED ENGINEER OTHER THAN THE ENGINEER OF RECORD, SHALL BE REVIEWED BY THE ENGINEER OF RECORD AND DETERMINED TO BE IN GENERAL CONFORMANCE WITH THE BUILDING DESIGN AND SO STATED ON THE SUBMITTAL. DEFERRED SUBMITTAL ITEMS SHALL NOT BE INSTALLED UNTIL THEIR DESIGN AND SUBMITTAL DOCUMENTS HAVE BEEN APPROVED BY THE BUILDING OFFICIAL.
12. DEFERRED SUBMITTALS SHALL INCLUDE THE FOLLOWING:
    WOOD "I" JOISTS, WOOD CHORD STEEL WEB JOISTS.

STRUCTURAL ABBREVIATIONS

A.B.	ANCHOR BOLT
ABC	AGGREGATE BASE COURSE
ACI	AMERICAN CONCRETE INSTITUTE
A.F.F.	ABOVE FINISHED FLOOR
AISC	AMERICAN INSTITUTE OF STEEL CONSTRUCTION
AITC	AMERICAN INSTITUTE OF TIMBER CONSTRUCTION
ALT	ALTERNATE / ALTERNATING
APA	AMERICAN PLYWOOD ASSOCIATION
APPROX	APPROXIMATE
ARCH	ARCHITECTURAL
ASTM	AMERICAN SOCIETY FOR TESTING AND MATERIALS
AWS	AMERICAN WELDING SOCIETY
@	AT (MEASUREMENT)
B.F.F.	BELOW FINISH FLOOR
B.L.	BUILDING LINE
BLDG	BUILDING
BLKG	BLOCKING
BM	BEAM
B.O.	BOTTOM OF
B.O.B.	BOTTOM OF BEAM
B.O.D.	BOTTOM OF DECK
B.O.F.	BOTTOM OF FOOTING
BOTT	BOTTOM
BRG	BEARING
BSMT	BASEMENT
BTWN	BETWEEN
C	CHANNEL SECTION
C/C	CENTER TO CENTER
CABO	COUNCIL OF AMERICAN BUILDING OFFICIALS
C.A.S.	CONCRETE ANCHOR STUD
C.I.P.	CAST IN PLACE
CF	CUBIC FOOT
CJ	CONSTRUCTION JOINT
C.L. or ℄	CENTER LINE
CLR	CLEAR
CMU	CONCRETE MASONRY UNIT
COL	COLUMN
CONC	CONCRETE
CONN	CONNECTION
CONT	CONTINUOUS
CRSI	CONCRETE REINFORCING STEEL INSTITUTE
CTJ	CONTROL JOINT
CTR	CENTER
CY	CUBIC YARD
d	PENNY (nails)
D	DEPTH (DIMENSION)
DBL	DOUBLE
Δ	DEFLECTION
D.F.	DOUGLAS FIR–LARCH
DIA or ø	DIAMETER
DIAPH	DIAPHRAGM
DL	DEAD LOAD
DN	DOWN
do	DITTO (REPEAT CALLOUT / NOTE)
DTL	DETAIL
DWG(S)	DRAWING(S)
EA	EACH
E.F.	EACH FACE
E.J.	EXPANSION JOINT
EL	ELEVATION
ELEC	ELECTRICAL
ENG	ENGINEER
E.O.S.	EDGE OF SLAB
EQ	EQUAL
EQUIP	EQUIPMENT
E.W.	EACH WAY
EXCAV	EXCAVATE / EXCAVATION
EXP	EXPANSION
EXIST	EXISTING
EXT	EXTERIOR
FDN	FOUNDATION
F.F.E.	FINISHED FLOOR ELEVATION
F.G.	FINISH GRADE
F.O.	FACE OF
F.O.W.	FACE OF WALL
F.P.	FULL PENETRATION (WELD)
FRMG	FRAMING
FS	FAR SIDE
FT	FOOT / FEET
FTG	FOOTING
GA	GAGE
GALV	GALVANIZED
GLB	GLUED–LAMINATED BEAM
G.S.N.	GENERAL STRUCTURAL NOTES
GYP	GYPSUM
HT or HGT	HEIGHT
HK	HOOK
HOR	HORIZONTAL
H.S.A.	HEADED STUD ANCHOR
IBC	INTERNATIONAL BUILDING CODE
ICBO	INTERNATIONAL COUNCIL OF BUILDING OFFICIALS
I.D.	INSIDE DIAMETER
I.F.	INSIDE FACE
IN	INCH
INT	INTERIOR
JST	JOIST
JT	JOINT
K	KIP(S) (1000 POUNDS)
K.O.	KNOCKOUT
KSF	KIP(S) PER SQUARE FOOT
KSI	KIP(S) PER SQUARE INCH
L	LENGTH (DIMENSION) OR ANGLE SECTION
LL	LIVE LOAD
LBS or #	POUNDS
LLH	LONG LEG HORIZONTAL
LLV	LONG LEG VERTICAL
LSH	LONG SIDE HORIZONTAL
LSV	LONG SIDE VERTICAL
MCJ	MASONRY CONTROL JOINT
MAT'L	MATERIAL
MAX	MAXIMUM
MECH	MECHANICAL
MFR(S)	MANUFACTURER(S)
MIN	MINIMUM
MISC	MISCELLANEOUS
M/W	MAKE IT WORK
N/A	NOT APPLICABLE
N.I.C.	NOT IN CONTRACT
NS	NEAR SIDE
N.T.S.	NOT TO SCALE
O.C.	ON CENTER
O.D.	OUTSIDE DIAMETER
O.F.	OUTSIDE FACE
OPNG	OPENING
OPP	OPPOSITE
P.C.	PRECAST CONCRETE
PCF	POUNDS PER CUBIC FOOT
PCI	PRESTRESSED CONCRETE INSTITUTE
PL or ℙ	PLATE
PLF	POUNDS PER LINEAR FOOT
PCF	POUNDS PER CUBIC FOOT
PLF	POUNDS PER LINEAR FOOT
PREFAB	PREFABRICATED
PRE–ENG	PRE–ENGINEERED
PSF	POUNDS PER SQUARE FOOT
PSI	POUNDS PER SQUARE INCH
P.T.	POST–TENSION
PT	POINT
PTI	POST–TENSIONING INSTITUTE
P.V.C.	POLYVINYL CHLORIDE (PIPE)
REBAR	REINFORCING BAR
REF	REFERENCE
REINF	REINFORCING STEEL
REQD	REQUIRED
RS	ROUGH SAWN
SCHED	SCHEDULE
SHT	SHEET
SIM	SIMILAR
SLH	SHORT LEG HORIZONTAL
SLV	SHORT LEG VERTICAL
SP	SPACE
STD	STANDARD
STIFF	STIFFENER
STL	STEEL
SYM	SYMMETRICAL
SQ	SQUARE
T&B	TOP AND BOTTOM
T&G	TONGUE AND GROOVE
THK	THICKNESS
TL	TOTAL LOAD
T.O.	TOP OF
T.O.B.	TOP OF BEAM
T.O.D.	TOP OF DECK
T.O.F.	TOP OF FOOTING
T.O.J.	TOP OF JOIST
T.O.L.	TOP OF LEDGER
T.O.M.	TOP OF MASONRY
T.O.P.	TOP OF PLATE (OR TOP OF PARAPET)
T.O.S.	TOP OF STEEL
T.O.W.	TOP OF WALL
TS	TUBE SECTION
TYP	TYPICAL
UBC	UNIFORM BUILDING CODE
U.N.O.	UNLESS NOTED OTHERWISE
VERT	VERTICAL
W	WIDTH (DIMENSION) OR WIDE FLANGE SECTION
W.P.	WORKING POINT
WPS	WELD PROCEDURE SPECIFICATION
W.W.F.	WELDED WIRE FABRIC
W/	WITH
W/O	WITHOUT
WT	WEIGHT

SYMBOLS

SYMBOL	DESCRIPTION	LOCATION
10	TYPICAL DETAIL	SEE S1 SERIES SHEETS FOR TYPICAL DETAILS. DETAILS MARKED "TYPICAL" MAY OR MAY NOT BE CUT ON PLANS.
246	DETAIL CUT SHOWN ON PLAN	SEE S4 SERIES SHEETS FOR FOUNDATION DETAILS. SEE S5 SERIES SHEETS FOR FRAMING DETAILS
6	PLAN NOTE	SEE PLAN NOTES ON EACH PLAN SHEET
	OPENING IN ROOF	WHERE SHOWN ON PLANS

MATERIALS

	8" AND 12" CMU WALL U.N.O.	SEE FOUNDATION/FRAMING PLANS
	6" STEEL STUD BEARING WALL U.N.O.	

PLAN ABBREVIATIONS

TOF	TOP OF FOOTING REFERENCED TO F.F.E. = 100'–0"
F1	FOOTING DESIGNATION
C1	COLUMN DESIGNATION
L1	LEDGER DESIGNATION
LT1	LINTEL DESIGNATION
W1	WALL REINFORCING

STRUCTURAL TESTS AND INSPECTIONS

		SPECIAL INSPECTION OR STRUCTURAL TEST FREQUENCY		SPECIAL INSPECTION PERFORMED BY	STRUCTURAL TEST PERFORMED BY
		CONTINUOUS	PERIODIC		
GRADING & FOUNDATION	A. PLACEMENT OF COMPACTED FILL, GRADING AND EXCAVATIONS (REF. 3317)				
	B. INSPECTION OF PILE DRIVING				
	C. INSPECTION FOR "DRILLED" SHAFT DRILLING				
CONCRETE	A. DURING CONCRETE PLACEMENT f'c > 2500 psi.		X	G.E.I.	
	B. DURING PLACEMENT OF NON SHRINK GROUT				
	C. MOLDING OF COMPRESSION TEST SAMPLES AND COMPRESSION TESTING		X		G.E.I.
	D. PLACEMENT OF REINFORCEMENT AND CONCRETE IN DRILLED SHAFTS				
	E. PLACEMENT OF CONCRETE, FOR BOLTS OR EMBEDS AS SPECIFIED				
	F. PNEUMATICALLY PLACED CONCRETE, PERSONNEL QUALIFICATION, REBAR PLACEMENT CONDITIONS, SAMPLE PANEL VERIFICATIONS				
	G. PLACEMENT OF HIGH STRENGTH GROUT AND TAKING SAMPLES				
	H. CONCRETE BATCHING				
	I. GRADE BEAM				
DRILLED IN ANCHORS	A. INSTALLATION OF ADHESIVE ANCHORS, RODS, DOWELS, SHALL BE CONTINUOUSLY INSPECTED DURING INSTALLATION.		X	G.E.I.	
	B. EXPANSION ANCHORS IN CONCRETE OR MASONRY				
REINFORCING STEEL	A. PLACEMENT OF REINFORCING IN CMU WALLS AND FOOTING		X	G.E.I.	
	B. SAMPLING FOR TESTING				
	C. MILL REPORT VERIFICATION AND MATERIAL IDENTIFICATION				
	D. FOR PRESTRESS TENDON PROFILE, VERIFY EQUIPMENT CALIBRATION, OBSERVE AND RECORD ELONGATION AND FORCE.				
WELDING	A. SHOP FABRICATION AND WELDING (REF. 1704.3.1)		X	G.E.I.	
	B. STRUCTURAL FIELD WELDING (REF. 1704.3.1) (VISUAL)		X	G.E.I.	
	C. STRUCTURAL LIGHT GAGE FRAMING OR DECKING (VISUAL)				
	D. SHEAR CONNECTORS INSPECTION AND FIELD TEST (NONDESTRUCTIVE)				
	E. REINFORCING STEEL WELDING (VISUAL)				
STRUCTURAL STEEL	A. VERIFICATION OF MILL REPORTS AND IDENTIFICATION OF STEEL OR PHYSICAL TESTING.				
	B. ERECTION AND INSPECTION OF SURFACES				
BOLTING	A. HIGH STRENGTH BOLTING (REF. 1704.3.3)				
MASONRY	A. PLACEMENT OF MASONRY UNITS		X	G.E.I.	
	B. MASONRY PRISM CONSTRUCTION AND TESTING		X		G.E.I.
	C. MORTAR AND GROUT SAMPLING AND TESTING		X		G.E.I.
	D. GROUTING OPERATIONS		X	G.E.I.	
	E. REVIEW OF JOINTS PRIOR TO RE–POINTING EXISTING BRICK MORTAR JOINTS		X	G.E.I.	
INSULATING CONCRETE FILL	A. INSPECTION FOR CONCRETE PLACEMENT AND MOLDING TEST CYLINDERS				
SHEAR DIAPHRAGMS	A. PLACEMENT OF NAILING OF SHEATHING				
	B. DRAG CONNECTIONS AND HOLD–DOWNS				
	C. X–BRACING SHEAR WALLS (NUMBER OF SCREWS, GUSSET PLATE GAGE AND DEMENSION PER STRUCTURAL DETAILS AND SCHEDULES)				
SPRAYED–ON FIRE PROOFING	A. THICKNESS, DENSITY AND COHESION/ADHESION (REF. 1704.11)				
SPECIAL CONDITIONS.	A. MOMENT FRAMES (VISUAL INSPECTION OF WELDS, BASE PLATE AND ANCHOR BOLTS SIZES)				
	B. RELEVELING OF FLOOR FRAMING				
	C. EXTERIOR INSULATION AND FINISH SYSTEM (E.I.F.S.)				

HUNT & CARAWA
Architects, ltd.
7145 North 57th Drive
Glendale, Arizona 85301
Voice (623) 934-4090 Fax (623) 934-4501

Arizona Army National Guard
Silverbell Fire Station 361
For
AZ Department of Emergency and Military Affairs

STRUCTURAL NOTES

Revisions:

Drawn by: SG
Checked by: JG
Scale:
Date: 8/17/06

JOB # 06002

SHEET
S1-1.1

Grenier Engineering, Inc.
Structural and Civil Engineering Consultants
PROJECT NO. GE 06202
4515 S. McClintock Dr. #211 TEMPE, ARIZONA 85282 TEL: (480) 831–1170 FAX: (480) 831–1136

THIS DRAWING & THE DATA CONTAINED HEREIN ARE THE PROPERTY OF HUNT & CARAWAY ARCHITECTS, LTD. AND MAY NOT BE USED, REPRODUCED, COPIED, OR TRANSFERRED WITHOUT THE WRITTEN CONSENT OF THE PROPRIETOR AND/OR COMPANY REPRESENTATIVE. NOR SHALL ANY DATA OR INFORMATION CONTAINED HEREIN BE USED IN PART OR IN FULL FOR ANY PURPOSE OTHER THAN THAT DESCRIBED WITHIN THESE DOCUMENTS.

THIS DRAWING IS NOT TO BE USED FOR CONSTRUCTION PURPOSES UNTIL SEALED AND SIGNED BY ENGINEER OF RECORD. REUSE OR REPRODUCTION WITHOUT WRITTEN PERMISSION IS PROHIBITED. ©

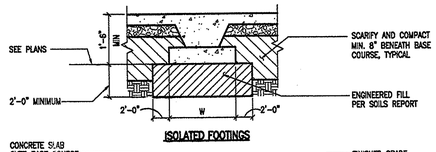

SEE GENERAL STRUCTURAL NOTES FOR ADDITIONAL INFORMATION.

B = FOOTING WIDTH
W = LARGEST FOOTING DIMENSION

1 TYPICAL EARTHWORK DETAIL
TYPICAL DETAIL 2.01.005R

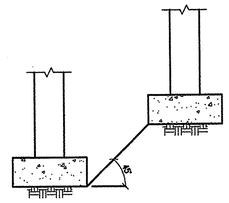

NOTE:
MAXIMUM SLOPE BETWEEN BOTTOMS OF FOOTINGS SHALL BE 45 DEGREES. STEP FOOTINGS AS REQUIRED. SEE TYPICAL STEPPED FOOTING DETAIL.

2 MAXIMUM SLOPE BETWEEN ADJACENT FOOTINGS
TYPICAL DETAIL 2.01.015

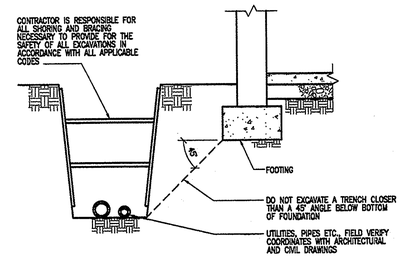

3 TYPICAL TRENCH DETAIL
TYPICAL DETAIL 2.01.017

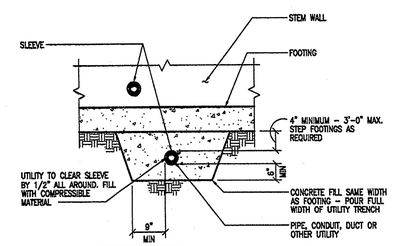

NOTES:
1. NO UTILITIES SHALL PASS THROUGH FOOTING OR THROUGH OR UNDER COLUMN FOOTINGS.
2. PROVIDE 4" MINIMUM SPACING BETWEEN MULTIPLE PIPES.

4 UTILITIES THROUGH/UNDER FOUNDATION
TYPICAL DETAIL 2.01.020

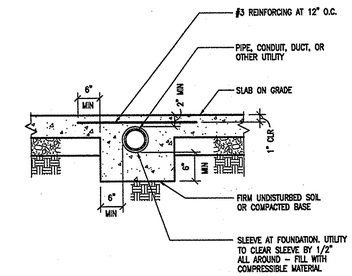

NOTES:
1. PROVIDE 4" MINIMUM SPACING BETWEEN MULTIPLE PIPES OR CONDUIT.
2. THIS DETAIL APPLIES ONLY IF SPECIFICALLY APPROVED BY ARCHITECT IN WRITING.

5 SLEEVE FOR UTILITY BELOW SLAB
TYPICAL DETAIL 2.01.021

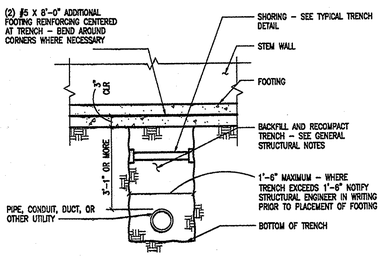

NOTES:
1. FOR TRENCH DEPTH OF 3'-0" OR LESS, SEE TYPICAL UTILITY THROUGH/UNDER FOUNDATION DETAIL. NO UTILITY SHALL PASS THROUGH CONTINUOUS FOOTINGS OR THROUGH OR UNDER COLUMN FOOTINGS.
2. CONTRACTOR SHALL VERIFY THAT BURIED UTILITIES HAVE ADEQUATE STRENGTH TO RESIST EARTH PRESSURE.

6 UTILITY PASSING BELOW WALL FOOTING IN TRENCH
TYPICAL DETAIL 2.01.019

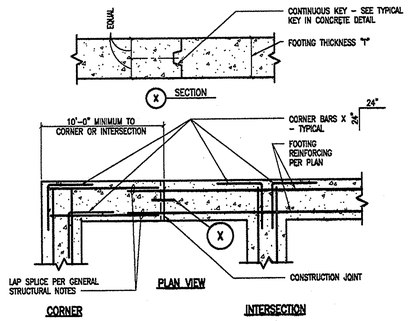

7 TYPICAL CORNER REINFORCING AND CONSTRUCTION JOINTS IN CONCRETE FOOTINGS
TYPICAL DETAIL 2.01.023

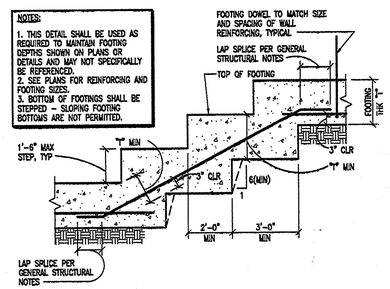

8 TYPICAL STEPPED FOOTING
TYPICAL DETAIL 2.01.024

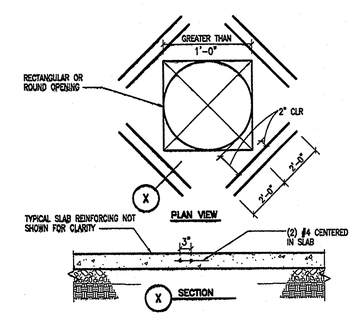

9 TYPICAL REINFORCING AT OPENING IN SLAB ON GRADE
TYPICAL DETAIL 2.01.025

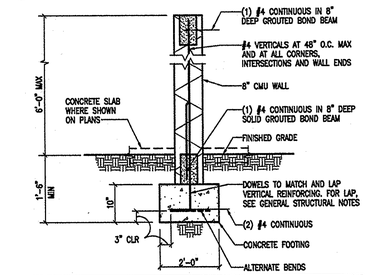

NOTES:
1. FOR LOCATION OF SITE WALLS, COORDINATE WITH ARCHITECTURAL AND/OR CIVIL DRAWINGS.
2. PROVIDE MASONRY CONTROL JOINTS PER TYPICAL DETAIL AT 16'-0" O.C. MAXIMUM IN SITE WALLS.

10 FREESTANDING CMU WALL
TYPICAL DETAIL 2.05.004R

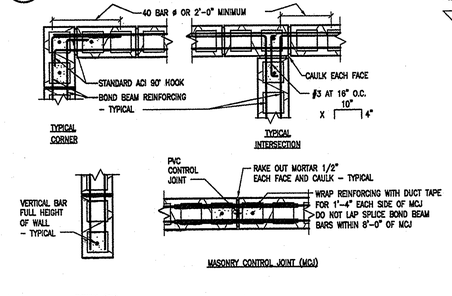

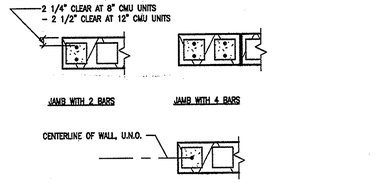

NOTES:
1. SEE CMU WALL REINFORCING SCHEDULE FOR REINFORCING.
2. ALL CELLS AND BOND BEAMS WITH REINFORCING SHALL BE GROUTED.
3. WHERE 2 BARS PER CELL ARE INDICATED, LOCATE AS SHOWN ON JAMB DETAILS AND PROVIDE ADDITIONAL LAP SPLICE LENGTH PER THE GENERAL STRUCTURAL NOTES.
4. MASONRY CONTROL JOINTS SHALL EXTEND FULL HEIGHT OF MASONRY WALL. TERMINATE ALL HORIZONTAL REINFORCING, INCLUDING JOINT REINFORCING, AT MASONRY CONTROL JOINTS EXCEPT FLOOR AND ROOF BOND BEAM REINFORCING.
5. SINGLE BARS SHALL BE ACCURATELY LOCATED AT CENTERLINE OF WALL U.N.O.

11 TYPICAL CMU WALL REINFORCING
TYPICAL DETAIL 4.01.004

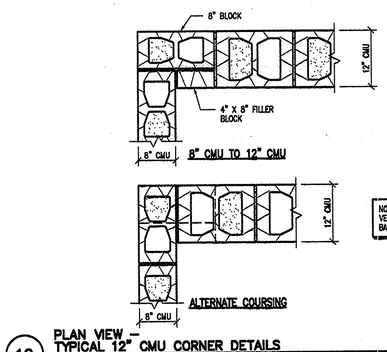

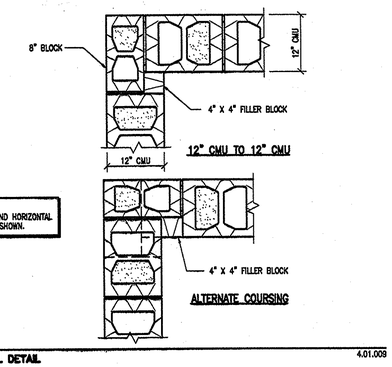

12 PLAN VIEW – TYPICAL 12" CMU CORNER DETAILS
TYPICAL DETAIL 4.01.009

OPENING WIDTH	"H"	REINFORCING	STIRRUPS
0" – 3'-4"	16"	(2) #4 BOTTOM	———
3'-5" – 4'-8"	24"	(2) #4 TOP AND BOTTOM	#3 AT 16" O.C.
4'-9" – 6'-0"	32"	(2) #5 TOP AND BOTTOM	#3 AT 16" O.C.

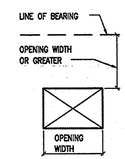

NOTES:
1. UNLESS NOTED OTHERWISE OR SHOWN, PROVIDE REINFORCED MASONRY LINTELS ACCORDING TO THE ABOVE SCHEDULE IN NON-BEARING WALLS. SEE SKETCH ABOVE FOR BEARING WALLS WHERE THESE LINTELS MAY BE USED.
2. PROVIDE LINTELS ABOVE ALL OPENINGS IN CMU WALLS, INCLUDING ALL MECHANICAL DUCTS PASSING THROUGH CMU WALLS, AND ABOVE ALL BUILT-IN ITEMS (SUCH AS CABINETS, LOUVERS, GRILLES, ACCESS PANELS, ETC.). DO NOT LOCATE OPENINGS WITHIN 2'-0" OF MASONRY CONTROL JOINTS OR ADJACENT OPENINGS.
3. SEE TYPICAL REINFORCED CMU LINTEL DETAIL FOR ADDITIONAL INFORMATION.
4. SEE TYPICAL CMU WALL REINFORCING AT OPENINGS DETAIL FOR REINFORCING AT SIDES AND BOTTOM OF OPENING.

13 REINFORCING FOR NON-SCHEDULED OPENINGS IN CMU WALLS
TYPICAL DETAIL 4.01.011

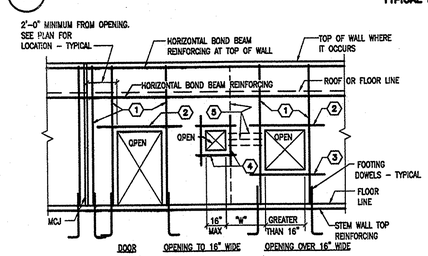

NOTES:
1. JAMB BARS PER TYPICAL CMU WALL REINFORCING SCHEDULE OR PLANS FULL HEIGHT OF WALL.
2. REINFORCING PER LINTEL SCHEDULE OR LINTEL DETAILS.
3. (1) #4 SILL BAR. EXTEND 2'-0" PAST OPENING.
4. (1) #4 EACH SIDE OF OPENING U.N.O. EXTEND 2'-0" PAST OPENING.
5. WHEN "W" IS LESS THAN 2'-0" AT 8" CMU WALLS AND 3'-0" AT 12" CMU WALLS, SEE ELEVATION OF PIER REINFORCING.

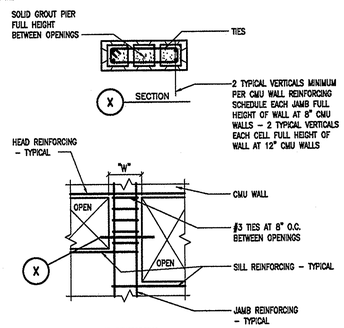

14 TYPICAL CMU WALL REINFORCING AT OPENINGS
TYPICAL DETAIL 4.01.010

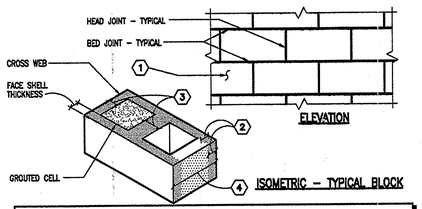

NOTES:
1. LAY MASONRY IN RUNNING BOND U.N.O. ON DRAWINGS.
2. ALL HEAD AND BED JOINTS SHALL BE FILLED SOLIDLY WITH MORTAR FOR THE FULL THICKNESS OF THE FACE SHELL EXCEPT WHERE JOINTS ARE RAKED.
3. SPREAD OUT FULL MORTAR BED AT CROSS WEBS IN STARTING COURSE ON FOOTINGS AND IN ALL COURSES OF PIERS, COLUMNS, AND PILASTERS, AND IN WALLS WHERE WEBS ARE ADJACENT TO CELLS OR CAVITIES TO BE REINFORCED OR FILLED WITH GROUT. FOR STARTING COURSE ON FOOTINGS WHERE CELLS ARE NOT GROUTED, SPREAD OUT FULL MORTAR BED INCLUDING AREAS UNDER CELLS.
4. FOR SOLID GROUTED WALLS, THE HEAD JOINTS SHALL BE COMPLETELY FILLED OR BUTTERED FOR FULL WIDTH OF THE WALL AND UNIT SHOVED INTO PLACE. DO NOT SLUSH HEAD JOINTS.

15 MORTAR REQUIRED AT TYPICAL CMU CONSTRUCTION
TYPICAL DETAIL 4.01.012

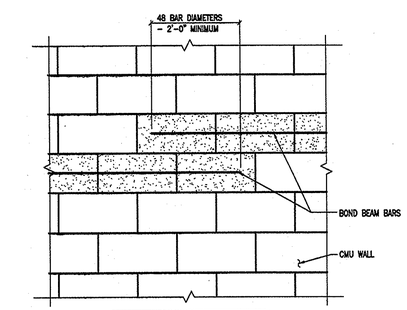

16 STEPPED CMU WALL BOND BEAM
TYPICAL DETAIL 4.01.050

HUNT & CARAWA Architects, ltd.
7145 North 57th Drive
Glendale, Arizona 85301
Voice (623) 934-4090 Fax (623) 934-4501

Arizona Army National Guard
Silverbell Fire Station 361
For
AZ Department of Emergency and Military Affairs

TYPICAL DETAILS

Revisions:

Drawn by: SG
Checked by: JG
Scale:
Date: 8/17/06

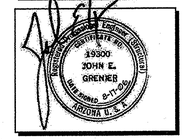

JOB # 06002

SHEET S1-1.2

Grenier Engineering, Inc.
Structural and Civil Engineering Consultants
PROJECT NO. GE 06202
4515 S. McClintock Dr. #211 TEMPE, ARIZONA 85282 TEL: (480) 831-1170 FAX: (480) 831-1136

THIS DRAWING & THE DATA CONTAINED HEREIN ARE THE PROPERTY OF HUNT & CARAWAY ARCHITECTS, LTD. AND MAY NOT BE USED, REPRODUCED, COPIED, OR TRANSFERRED WITHOUT THE WRITTEN CONSENT OF THE PROPRIETORS AND/OR COMPANY REPRESENTATIVE. NOR SHALL ANY DATA OR INFORMATION CONTAINED HEREIN BE USED IN PART OR IN FULL FOR ANY PURPOSE OTHER THAN THAT DESCRIBED WITHIN THESE DOCUMENTS.

THIS DRAWING IS NOT TO BE USED FOR CONSTRUCTION PURPOSES UNTIL SEALED AND SIGNED BY ENGINEER OF RECORD. REUSE OR REPRODUCTION WITHOUT WRITTEN PERMISSION IS PROHIBITED. ©

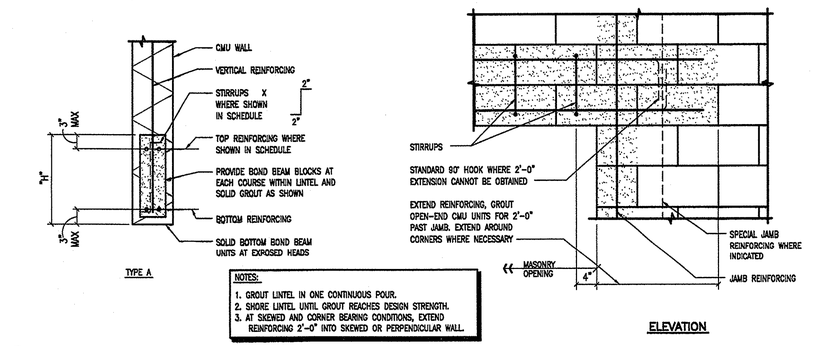

NOTES:
1. GROUT LINTEL IN ONE CONTINUOUS POUR.
2. SHORE LINTEL UNTIL GROUT REACHES DESIGN STRENGTH.
3. AT SKEWED AND CORNER BEARING CONDITIONS, EXTEND REINFORCING 2'-0" INTO SKEWED OR PERPENDICULAR WALL.

21 TYPICAL REINFORCED CMU LINTEL
TYPICAL DETAIL 4.01.020R

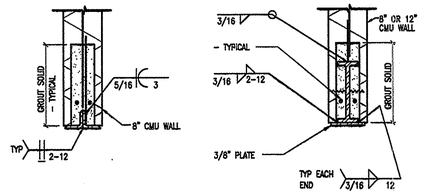

NOTES:
1. WHEN SPAN EXCEEDS 6'-0", SHORE LINTELS AT MIDSPAN.
2. WELD DOWELS TO LINTELS TO MATCH SPECIFIED VERTICAL REINFORCING.
3. GROUT ALL CELLS SOLID TO 1'-4" ABOVE BOTTOM OF ANGLE LINTELS AND 8" ABOVE TOP OF WIDE FLANGE LINTELS.
4. AT TYPE "C", USE VENEER TIES AT 16" O.C. EACH SIDE OF BEAM. TACK WELD TIES TO WEB OF BEAM.
5. AT TYPE "C", EXTEND BOTTOM PLATE TO END OF STEEL BEAM.

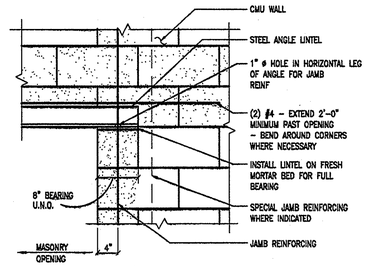

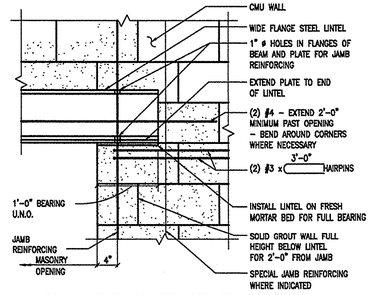

22 TYPICAL CMU WALL STEEL LINTELS
TYPICAL DETAIL 4.01.030R

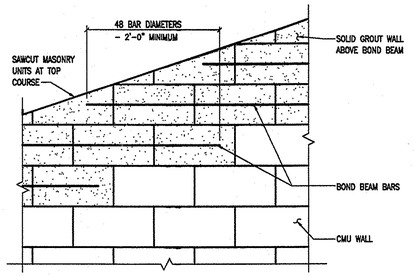

23 SLOPED CMU WALL BOND BEAM
TYPICAL DETAIL 4.01.051

BOLT DIAMETER	VERT BOLT EMBEDMENT LENGTH	HORIZ BOLT EMBEDMENT LENGTH
1/2"	7"	5"
5/8"	7"	5"
3/4"	8"	6"
7/8"	8"	6"
1"	9"	7"

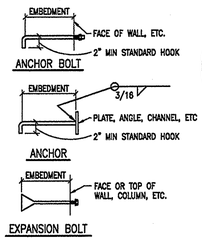

NOTES:
1. PROVIDE ANCHORS, ANCHOR BOLTS AND EXPANSION BOLTS PER THIS SCHEDULE IN CONCRETE OR MASONRY UNLESS NOTED OTHERWISE ON PLANS OR DETAILS. EXPANSION BOLTS SHALL NOT BE USED IN BRICK MASONRY.
2. EXPANSION BOLTS USED IN CMU SHALL BE A "DYNABOLT" BY ITW RAMSET/REDHEAD OR OTHERS WITH A CURRENT ICBO APPROVAL IN MASONRY. EXPANSION BOLTS SHALL BE CENTERED IN GROUTED CELLS. EXPANSION BOLTS SHALL BE USED ONLY WHERE SPECIFICALLY SHOWN ON THE DRAWINGS OR WHEN APPLICATION IS APPROVED IN WRITING BY THE STRUCTURAL ENGINEER.

24 TYPICAL ANCHOR, ANCHOR BOLT, AND EXPANSION BOLT SCHEDULE
TYPICAL DETAIL 5.01.045

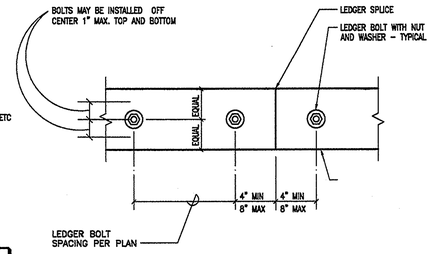

25 WOOD LEDGER SPLICE
TYPICAL DETAIL 6.01.013

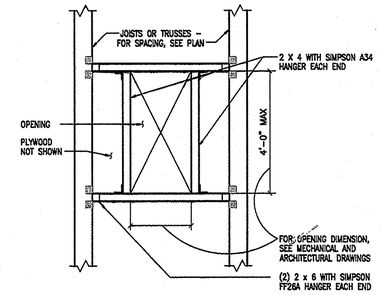

26 FRAMING AT SMALL OPENING
TYPICAL DETAIL 6.51.002

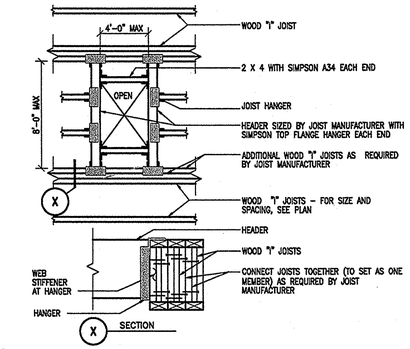

27 WOOD "I" JOIST FRAMING AT LARGE OPENING
TYPICAL DETAIL 6.51.004

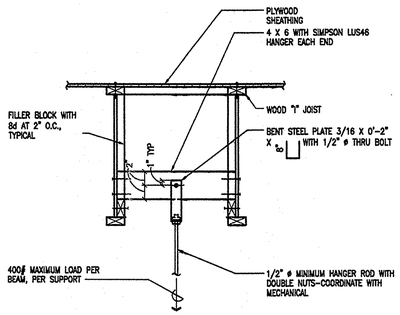

28 EQUIPMENT SUPPORTS
TYPICAL DETAIL 6.51.011

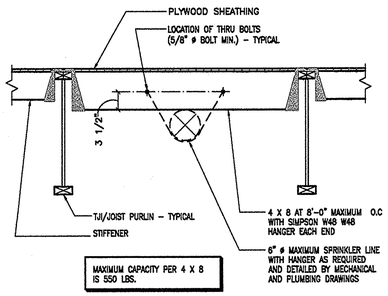

MAXIMUM CAPACITY PER 4 X 8 IS 550 LBS.

29 SPRINKLER LINE SUPPORT
TYPICAL DETAIL 6.51.008

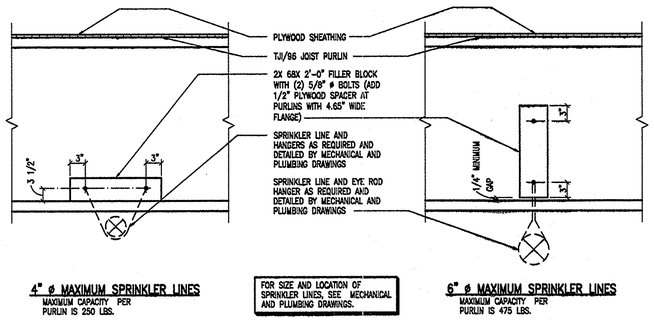

4" ø MAXIMUM SPRINKLER LINES
MAXIMUM CAPACITY PER PURLIN IS 250 LBS.

FOR SIZE AND LOCATION OF SPRINKLER LINES, SEE MECHANICAL AND PLUMBING DRAWINGS.

6" ø MAXIMUM SPRINKLER LINES
MAXIMUM CAPACITY PER PURLIN IS 475 LBS.

30 SPRINKLER LINE SUPPORT
TYPICAL DETAIL 6.51.007

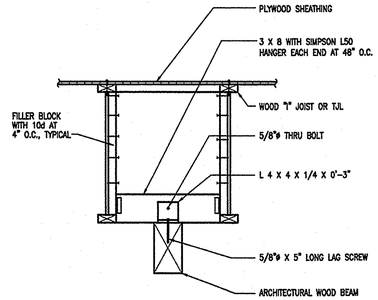

31 SUPPORT FOR NON-STRUCTURAL ARCHITECTURAL BEAMS
TYPICAL DETAIL

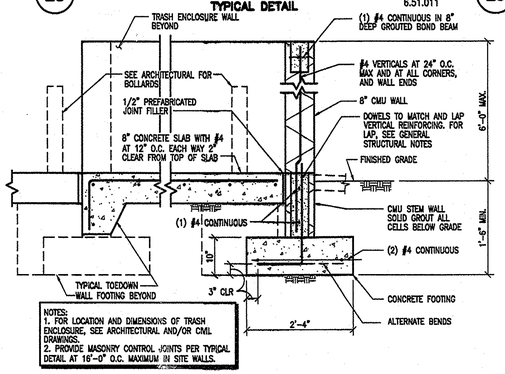

NOTES:
1. FOR LOCATION AND DIMENSIONS OF TRASH ENCLOSURE, SEE ARCHITECTURAL AND/OR CMU DRAWINGS.
2. PROVIDE MASONRY CONTROL JOINTS PER TYPICAL DETAIL AT 16'-0" O.C. MAXIMUM IN SITE WALLS.

32 TRASH ENCLOSURE WALL AND SLAB
4.01.085R

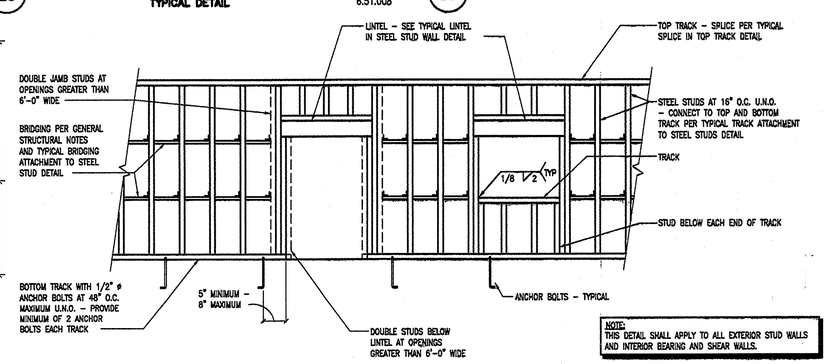

NOTE:
THIS DETAIL SHALL APPLY TO ALL EXTERIOR STUD WALLS AND INTERIOR BEARING AND SHEAR WALLS.

33 TYPICAL STEEL STUD WALL FRAMING
TYPICAL DETAIL 5.51.001

HUNT & CARAWA
Architects, ltd.
7145 North 57th Drive
Glendale, Arizona 85301
Voice (623) 934-4090 Fax (623) 934-4501

Arizona Army National Guard
Silverbell Fire Station 361
For
AZ Department of Emergency and Military Affairs

TYPICAL DETAILS

Revisions:

Drawn by: SG
Checked by: JG
Scale:
Date: 8/21/06

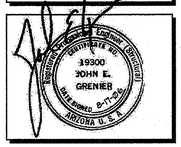

JOB # 06002

SHEET S1-1.3

Grenier Engineering, Inc.
Structural and Civil Engineering Consultants
PROJECT NO. GE 06202
4515 S. McClintock Dr. #211 TEMPE, ARIZONA 85282 TEL: (480) 831-1170 FAX: (480) 831-1136

THIS DRAWING IS NOT TO BE USED FOR CONSTRUCTION PURPOSES UNTIL SEALED AND SIGNED BY ENGINEER OF RECORD. REUSE OR REPRODUCTION WITHOUT WRITTEN PERMISSION IS PROHIBITED. ©

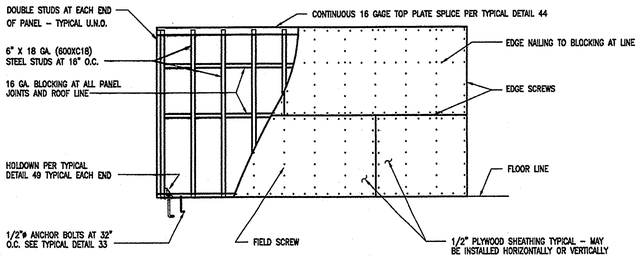

NOTE: ALL SCREWS ATTACHING PLYWOOD OR OSB TO STEEL STUDS SHALL BE SELF-DRILLING NO. 8 X 1", FLAT HEAD WITH MINIMUM HEAD DIAMETER OF 0.292". EDGE SCREWS ARE AT 6" O.C. FIELD SCREWS ARE AT 12" O.C., MAX.

41 STEEL STUD SHEAR WALL ELEVATIONS – ONE STORY
TYPICAL DETAIL 5.51.005

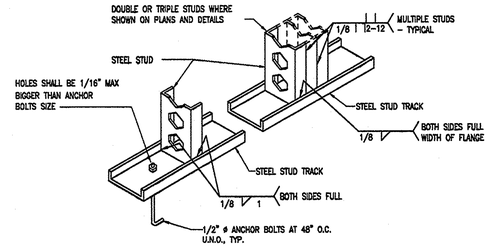

NOTES:
1. ALL STRUCTURAL STEEL STUDS SHALL BE FIRMLY SEATED FOR FULL END BEARING ON TOP AND BOTTOM TRACK.
2. DETAILS – APPLIES TO TOP AND BOTTOM OF STUDS.

42 TYPICAL TRACK ATTACHMENTS TO STRUCTURAL STEEL STUDS
TYPICAL DETAIL 5.51.006

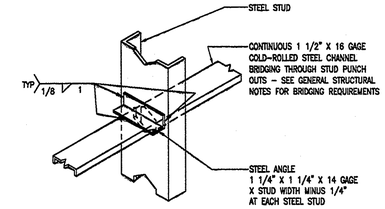

NOTE:
IN LIEU OF WELDING, STEEL ANGLE MAY BE CONNECTED TO STEEL STUD AND CHANNEL WITH (2) #10 X 3/4" HEX WASHER HEAD SCREWS EACH.

43 TYPICAL BRIDGING ATTACHMENT TO STEEL STUD
TYPICAL DETAIL 5.51.009

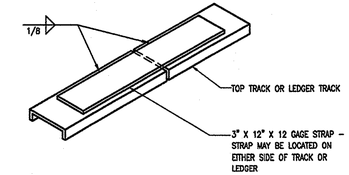

NOTE:
SPLICES IN TOP TRACKS SHALL BE LOCATED AT CENTERLINE OF STUDS ONLY.

44 TYPICAL SPLICE IN TOP TRACKS AND LEDGER TRACKS
TYPICAL DETAIL 5.51.010

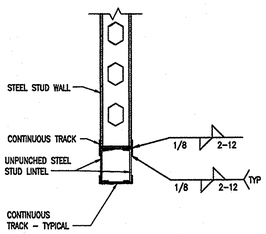

TYPE "D"

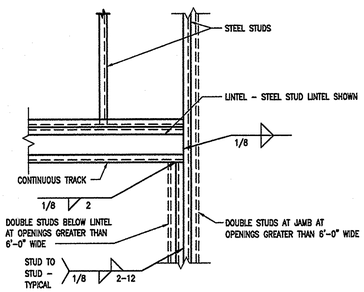

TYPICAL LINTEL BEARING

45 TYPICAL STRUCTURAL STEEL STUD WALL LINTEL
TYPICAL DETAIL 5.51.018R

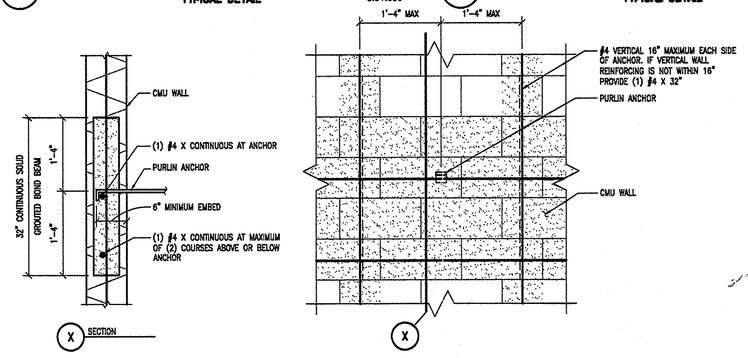

46 PAI/MPAI PURLIN TO CMU WALL
TYPICAL DETAIL

MODEL NO.	L	FASTENERS INTO JOIST	ALLOWABLE TENSION LOADS MASONRY (133)	(160)
MAXIMUM CAPACITY WITH 2 X LEDGER				
PAI18	18	(10) 10dx1 1/2	1255	1505
PAI23	23	(15) 10dx1 1/2	1880	2255
PAI28	29	(21) 10dx1 1/2	2630	2815
PAI35	35	(26) 10dx1 1/2	2815	2815
MPAI32	32	(16) 10dx1 1/2	1960	2355
MPAI44	44	(24) 10dx1 1/2	2865	2865
MAXIMUM CAPACITY WITH 3 X LEDGER				
PAI18	18	(8) 10dx1 1/2	1000	1205
PAI23	23	(13) 10dx1 1/2	1630	1955
PAI28	29	(19) 10dx1 1/2	2380	2815
PAI35	35	(24) 10dx1 1/2	2815	2815
MPAI32	32	(16) 10dx1 1/2	1960	2355
MPAI44	44	(24) 10dx1 1/2	2865	2865
MAXIMUM CAPACITY WITH 4 X LEDGER				
PAI18	18	(7) 10dx1 1/2	875	1055
PAI23	23	(12) 10dx1 1/2	1505	1805
PAI28	29	(18) 10dx1 1/2	2255	2705
PAI35	35	(23) 10dx1 1/2	2815	2815
MPAI32	32	(16) 10dx1 1/2	1960	2355
MPAI44	44	(24) 10dx1 1/2	2865	2865

NOTES:
1. ALLOWABLE LOADS ARE FOR A HORIZONTAL INSTALLATION INTO THE SIDE OF A MASONRY WALL.
2. ALLOWABLE LOADS HAVE BEEN INCREASED FOR EARTHQUAKE OR WIND LOAD DURATIONS WITH NO FURTHER INCREASE ALLOWED; REDUCE WHERE OTHER LOAD DURATIONS GOVERN.
3. NAILS: 10d X 1 1/2" = 0.148"ϕ X 1 1/2" LONG.

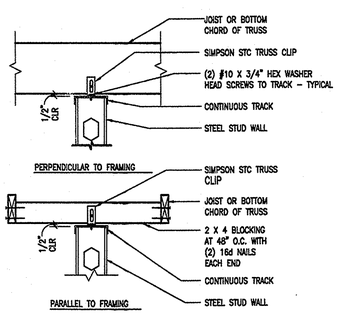

47 TYPICAL CONNECTION OF NON-BEARING PARTITIONS TO FLOOR OR ROOF FRAMING
TYPICAL DETAIL 5.51.020

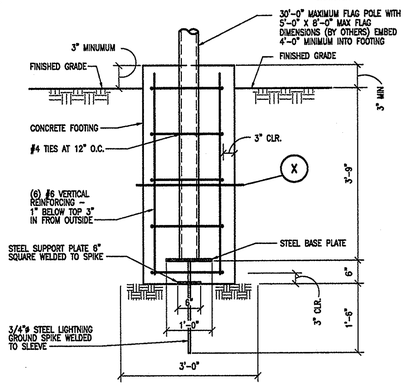

48 FLAG POLE FOOTING

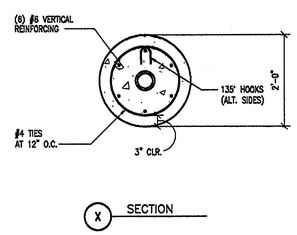

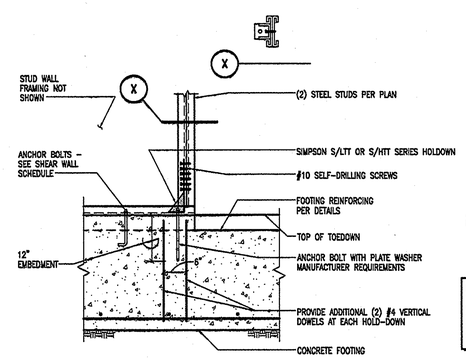

49 SIMPSON HOLDOWN AT STEEL STUDS
TYPICAL DETAIL 2.08.009

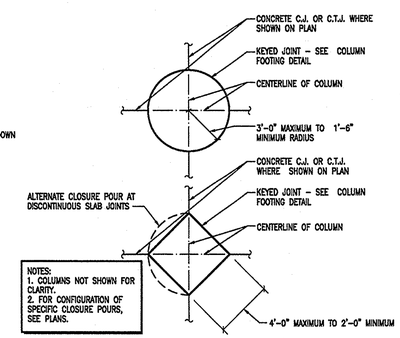

NOTES:
1. COLUMNS NOT SHOWN FOR CLARITY.
2. FOR CONFIGURATION OF SPECIFIC CLOSURE POURS, SEE PLANS.

50 TYPICAL CONCRETE CLOSURE POUR IN CONCRETE SLAB ON GRADE AT STEEL COLUMN
TYPICAL DETAIL 2.01.026

HUNT & CARAWA
Architects, ltd.
7145 North 57th Drive
Glendale, Arizona 85301
Voice (623) 934-4090 Fax (623) 934-4501

Arizona Army National Guard
Silverbell Fire Station 361
For
AZ Department of Emergency and Military Affairs

TYPICAL DETAILS

Revisions:

Drawn by: SG
Checked by: JG
Scale:
Date: 8/11/06

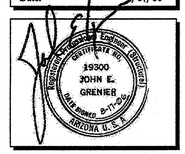

JOB # 06002

SHEET S1-1.4

Grenier Engineering, Inc.
Structural and Civil Engineering Consultants
PROJECT NO. GE 06202
4515 S. McClintock Dr. #211 TEMPE, ARIZONA 85282 TEL: (480) 831-1170 FAX: (480) 831-1136

THIS DRAWING IS NOT TO BE USED FOR CONSTRUCTION PURPOSES UNTIL SEALED AND SIGNED BY ENGINEER OF RECORD. REUSE OR REPRODUCTION WITHOUT WRITTEN PERMISSION IS PROHIBITED. ©

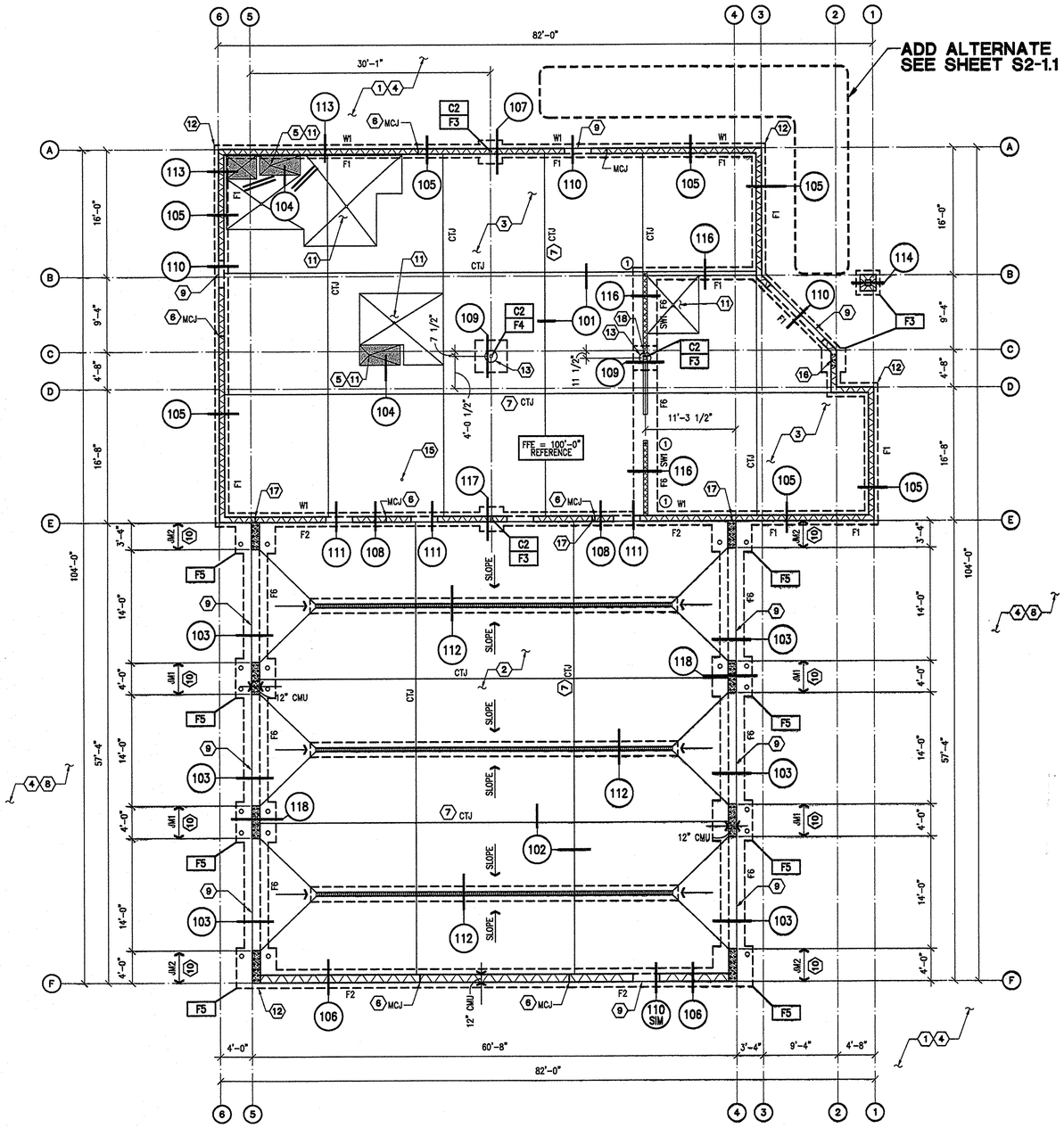

FOUNDATION PLAN

SCALE: 1/8" = 1'-0"

FOUNDATION SCHEDULES

COLUMN SCHEDULE

MARK	SIZE	BASE CONNECTION	REMARKS
C1	HSS 4 X 4 X 3/16	5/8 X 10 X 0'-10" WITH (4) 3/4"ø ANCHOR BOLTS	SEE DETAIL 122
C2	HSS 5 X 5 X 1/4	3/4 X 12 X 1'-0" WITH (4) 3/4"ø ANCHOR BOLTS	SEE DETAILS 107, 109 AND 117

FOOTING SCHEDULE

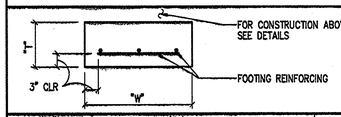

MARK	DIMENSIONS "W"	DIMENSIONS "T"	FOOTING REINFORCING	REMARKS
F1	1'-6" X CONTINUOUS	10"	(2) #4 CONTINUOUS	–
F2	2'-0" X CONTINUOUS	10"	(3) #4 CONTINUOUS	–
F3	3'-0" SQUARE	12"	(3) #5 EACH WAY	–
F4	4'-0" SQUARE	12"	(4) #5 EACH WAY	–
F5	5'-0" SQUARE	14"	(6) #5 EACH WAY	–
F6	3'-0" X CONTINUOUS	12"	(3) #4 CONTINUOUS	–

MASONRY WALL REINFORCING (W) SCHEDULE

MARK	REINFORCING VERTICAL	REINFORCING HORIZONTAL	REMARKS
W1	(2) #5 AT 16" O.C.	JOINT REINFORCING	–

TYPICAL CMU WALL REINFORCING SCHEDULE

	LOCATION		8" CMU WALLS	12" CMU WALLS @ APARATUS BAY
VERTICAL REINFORCING	TYPICAL THROUGHOUT		#5 AT 48" O.C.	#6 AT 16" O.C.
	CORNERS		(3) #5	(3) #6
	INTERSECTIONS		(2) #5	(2) #6
	EACH SIDE OF MCJ AND END OF WALL		(1) #5	(1) #6
	JAMBS	AT MASONRY OPENINGS UP TO 4'-0"	(2) #5	(2) #6
		AT MASONRY OPENINGS 4'-1" TO 6'-0"	(4) #5	SEE PLANS
		AT MASONRY OPENINGS 6'-1" TO 10'-0"	(6) #5	SEE PLANS
HORIZONTAL REINFORCING	JOINT REINFORCING		16" O.C.	16" O.C.
	TOP OF PARAPET		(1) #5	(1) #5
	BOND BEAM AT FLOOR AND ROOF LINES		(2) #4	(2) #5
	SILLS (EXTEND 2'-0" PAST OPENING)		(1) #4	(1) #5
	LINTELS		SEE DETAILS	SEE DETAILS

NOTE:

1. SCHEDULE APPLIES UNLESS NOTED OTHERWISE. SEE MASONRY WALL REINFORCING SCHEDULE FOR SPECIAL REINFORCING.

JAMB SCHEDULE

MARK	REINFORCING	REMARKS
JM1	(2) #6 IN EACH 6 ADJACENT CELLS (12 TOTAL) WITH #2 TIES AT 8" O.C.	SEE DETAIL 118
JM2	(2) #6 IN EACH 5 ADJACENT CELLS (10 TOTAL) WITH #3 TIES AT 8" O.C.	SEE DETAIL 118

GENERAL NOTES

1. VERIFY ALL DIMENSIONS WITH ARCHITECTURAL DRAWINGS PRIOR TO CONSTRUCTION.
2. SEE SHEET S1-1.0 FOR STRUCTURAL NOTES (MATERIALS, REQUIREMENTS, ETC.).
3. PROVIDE CONSTRUCTION JOINTS IN FOOTINGS IN ACCORDANCE WITH TYPICAL DETAILS.
4. CONTROL/CONSTRUCTION JOINTS IN EXTERIOR SLABS SHALL BE LOCATED BY THE CONTRACTOR AS REQUIRED TO MINIMIZE AND CONTROL SHRINKAGE CRACKING
5. SEE ARCHITECTURAL DRAWINGS FOR THE FOLLOWING:
   SIZE AND LOCATION OF ALL DOOR AND WINDOW OPENINGS.
   SIZE AND LOCATION OF ALL INTERIOR AND EXTERIOR NON-BEARING PARTITIONS.
   SIZE AND LOCATION OF ALL CONCRETE CURBS, EXTERIOR SLABS, EXTERIOR SLAB JOINTS; FLOOR AND ROOF DRAINS, SLOPES AND DEPRESSED AREAS; CHANGES IN LEVEL; CHAMFERS, CORNER FORMERS, GROOVES, BLOCKOUTS AND INSERTS; PAVING, SITE WORK, CURBS AND SITE WALLS.
   DIMENSIONS NOT SHOWN ON STRUCTURAL DRAWINGS.
   SIZE AND LOCATION OF OPENINGS THRU ROOF AND FLOOR.
6. ALL EXTERIOR WALLS AND INTERIOR BEARING/SHEARWALLS SHALL BE 6" X 18 GAGE STEEL STUDS AT 16" O.C. PER TYPICAL STEEL STUD FRAMING DETAILS U.N.O.

NOTE:
SEE ARCHITECTURAL AND CIVIL SITE DRAWINGS FOR ALL SITE SCREEN WALLS, SITE RETAINING WALLS, RAMPS, STAIRS, EXTERIOR CONCRETE WORK, ETC., TYPICAL.

FOUNDATION PLAN NOTES

1. SEE TYPICAL DETAIL AND STRUCTURAL NOTES FOR EARTHWORK REQUIREMENTS.
2. 8" CONCRETE SLAB OVER 6" A.B.C., TYPICAL AT APPARATUS BAY. REINFORCE WITH BOTH FIBER MESH AND #4 AT 18" O.C. (LAP 2'-0" MINIMUM) 2 1/4" CLEAR FROM TOP OF SLAB.
3. 4" CONCRETE SLAB OVER 4" A.B.C. REINFORCE WITH #4 AT 18" O.C. (1 3/4" CLEAR FROM TOP OF SLAB), TYPICAL U.N.O.
4. SEE ARCHITECTURAL AND CIVIL DRAWINGS FOR LOCATIONS AND LIMITS OF SITE WORK, SIDEWALKS, SLAB JOINTS, FINISH, SLOPES, CURBS, SITE WALLS, SITE RETAINING WALLS, ETC.
5. AREA INDICATES DEPRESSED SLAB – COORDINATE EXACT DIMENSIONS AND DEPTH WITH ARCHITECTURAL DRAWINGS.
6. MCJ INDICATES MASONRY CONTROL JOINT PER TYPICAL DETAIL.
7. CTJ INDICATES SLAB CONTROL JOINT. CJ INDICATES SLAB CONSTRUCTION JOINT.
8. SEE CIVIL DRAWINGS AND ARCHITECTURAL SITE PLAN FOR CONCRETE APRON SLAB/CONCRETE PAVEMENT AND JOINTS (COORDINATE WITH DETAIL 103).
9. PROVIDE 1/2" PREFORMED JOINT FILLER AT ALL LOCATIONS WHERE EXTERIOR SLABS ABUT THE BUILDING U.N.O. ON ARCHITECTURAL DRAWINGS.
10. – INDICATES SOLID GROUTED WALL FULL HEIGHT. FULLY MORTAR ALL HEAD JOINTS.
11. SLOPE SLAB TO DRAIN – SEE ARCHITECTURAL AND MECHANICAL/PLUMBING DRAWINGS.
12. ALL HORIZONTAL REINFORCING IN FOOTINGS, STEM WALLS AND WALLS SHALL BE CONTINUOUS AROUND ALL CORNERS AND INTERSECTIONS PER TYPICAL DETAILS.
13. CONCRETE CLOSURE POUR – TYPICAL AT ALL COLUMNS U.N.O. – SEE TYPICAL DETAIL.
14. 4" CONCRETE SLAB OVER 4" A.B.C.
15. FLOOR DRAIN – FOR EXACT LOCATION, ETC., SEE ARCHITECTURAL AND MECHANICAL/PLUMBING DRAWINGS.
16. PROVIDE #5 VERTICAL BAR FULL HEIGHT IN (3) ADJACENT CELLS CENTERED UNDER BEAM BEARING.
17. PROVIDE (2) #5 VERTICAL BAR FULL HEIGHT AT END CELL.
18. WELD DOUBLE END STUDS TO STEEL COLUMN WITH 2" LONG 1/8" FILLET WELD AT 12" O.C. EACH SIDE STAGGERED.

SHEAR WALL (SW) SCHEDULE

MARK	SHEATHING MATERIAL	EDGE SCREWING	FIELD SCREWING	BOTTOM TRACK ANCHOR BOLTS	REMARKS
SW1	1/2" PLYWOOD (BLOCKED)	#8 SCREWS AT 3" O.C.	#8 SCREWS AT 12" O.C.	1/2"ø A.B. AT 16" O.C.	CAPACITY = 608 PLF

NOTES:

1. FOR LOCATION OF SHEAR WALLS, SEE PLANS.
2. SEE TYPICAL STEEL STUD SHEAR WALL DETAIL
3. ALL PLYWOOD PANEL EDGES SHALL BE BLOCKED WITH STEEL STUD BLOCKING.
4. PROVIDE (2) 2 X STUDS OR POST AT END OF ALL SHEAR WALLS.
5. USE (2) ANCHOR BOLTS MINIMUM AT SHEAR WALLS.

HOLDOWN ⑦ SCHEDULE

MARK	HOLDOWN	REMARKS
1	SIMPSON S/HD8 WITH (24) #10 SCREWS INTO DOUBLE 18 GAGE END STUDS AND 7/8"ø ANCHOR BOLT	CAPACITY = 7615 #

HUNT & CARAWA
Architects, ltd.
7145 North 57th Drive
Glendale, Arizona 85301
Voice (623) 934-4090 Fax (623) 934-4501

Arizona Army National Guard
Silverbell Fire Station 361
For
AZ Department of Emergency and Military Affairs

FOUNDATION PLAN

Revisions:

Drawn by: SG
Checked by: JG
Scale:
Date: 8/11/06

JOB # 06002

SHEET S2-1.0

Grenier Engineering, Inc.
Structural and Civil Engineering Consultants
PROJECT NO. GE 06202
4515 S. McClintock Dr. #211 TEMPE, ARIZONA 85282 TEL: (480) 831-1170 FAX: (480) 831-1136

THIS DRAWING IS NOT TO BE USED FOR CONSTRUCTION PURPOSES UNTIL SEALED AND SIGNED BY ENGINEER OF RECORD. REUSE OR REPRODUCTION WITHOUT WRITTEN PERMISSION IS PROHIBITED. ©

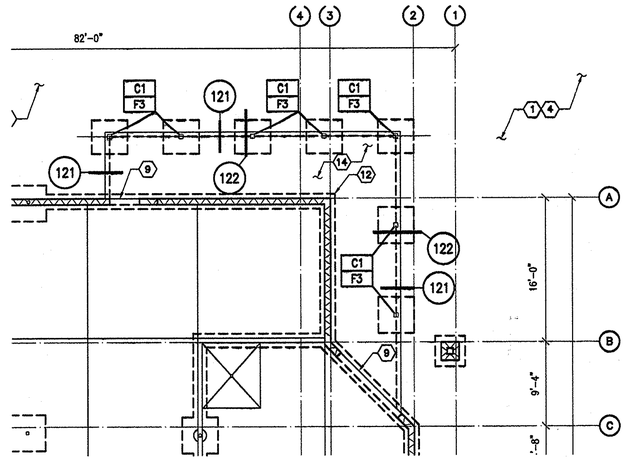

PARTIAL FOUNDATION PLAN - BID ALTERNATE #4

SCALE: 1/8" = 1'-0"

FOR INFORMATION SHOWN BUT NOTED – SEE SHEET S2-1.0

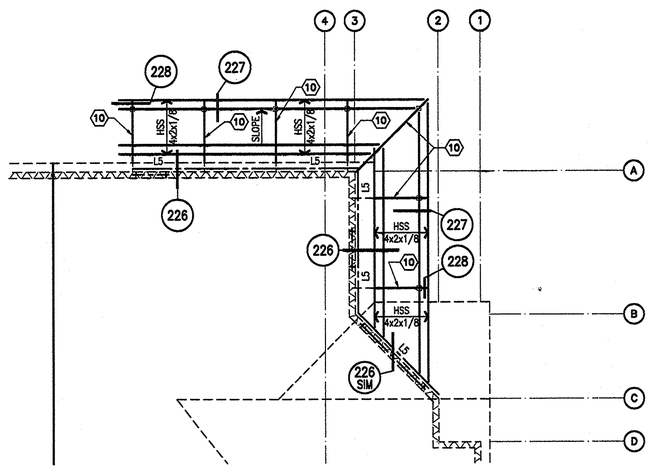

PARTIAL ROOF FRAMING PLAN - BID ALTERNATE #4

SCALE: 1/8" = 1'-0"

FOR INFORMATION SHOWN BUT NOTED – SEE SHEET S3-1.0

FOUNDATION SCHEDULES

COLUMN SCHEDULE

MARK	SIZE	BASE CONNECTION	REMARKS
C1	HSS 4 X 4 X 3/16	5/8 X 10 X 0'-10" WITH (4) 3/4"ø ANCHOR BOLTS	SEE DETAIL 122
C2	HSS 5 X 5 X 1/4	3/4 X 12 X 1'-0" WITH (4) 3/4"ø ANCHOR BOLTS	SEE DETAILS 107, 109 AND 117

FOOTING SCHEDULE

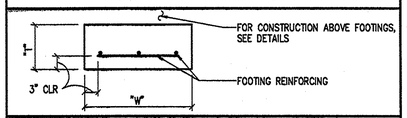

MARK	DIMENSIONS "W"	DIMENSIONS "T"	FOOTING REINFORCING	REMARKS
F1	1'-6" X CONTINUOUS	10"	(2) #4 CONTINUOUS	–
F2	2'-0" X CONTINUOUS	10"	(3) #4 CONTINUOUS	–
F3	3'-0" SQUARE	12"	(3) #5 EACH WAY	–
F4	4'-0" SQUARE	12"	(4) #5 EACH WAY	–
F5	5'-0" SQUARE	14"	(6) #5 EACH WAY	–
F6	3'-0" X CONTINUOUS	12"	(3) #4 CONTINUOUS	–

FRAMING SCHEDULES

LINTEL SCHEDULE

MARK	TYPE	LINTEL SIZE	REMARKS
LT1	"C"	W16 X 36	SEE DETAIL 22
LT2	"D"	(2) 600S200-43 UNPUNCHED LIGHT GAGE BOXED HEADER	SEE DETAIL 45
LT3	"A"	8" CMU H = 24" WITH (2) #5 BOTTOM	SEE DETAIL 21
LT4	"A"	12" CMU H = 32" WITH (2) #5 BOTTOM	SEE DETAIL 21

LEDGER SCHEDULE

MARK	LEDGER SIZE	CONNECTION	REMARKS
L1	4 X 12	1" ø ANCHOR BOLTS AT 16" O.C.	–
L2	3 X 8	3/4" ø ANCHOR BOLTS AT 48" O.C.	–
L3	3 X 8	3/4" ø ANCHOR BOLTS AT 32" O.C.	–
L4	2 X 10	(3) #10 SCREWS AND L70 EACH STUD	–
L5	L 3 X 3 X 1/4	3/4"ø ANCHOR BOLT AT 32" O.C.	–

GENERAL NOTES

1. VERIFY ALL DIMENSIONS WITH ARCHITECTURAL DRAWINGS PRIOR TO CONSTRUCTION.
2. SEE SHEET S1-1.0 FOR STRUCTURAL NOTES (MATERIALS, REQUIREMENTS, ETC.).
3. PROVIDE CONSTRUCTION JOINTS IN FOOTINGS IN ACCORDANCE WITH TYPICAL DETAILS.
4. CONTROL/CONSTRUCTION JOINTS IN EXTERIOR SLABS SHALL BE LOCATED BY THE CONTRACTOR AS REQUIRED TO MINIMIZE AND CONTROL SHRINKAGE CRACKING
5. SEE ARCHITECTURAL DRAWINGS FOR THE FOLLOWING:
   SIZE AND LOCATION OF ALL DOOR AND WINDOW OPENINGS.
   SIZE AND LOCATION OF ALL INTERIOR AND EXTERIOR NON-BEARING PARTITIONS.
   SIZE AND LOCATION OF ALL CONCRETE CURBS, EXTERIOR SLABS, EXTERIOR SLAB JOINTS; FLOOR AND ROOF DRAINS, SLOPES AND DEPRESSED AREAS; CHANGES IN LEVEL; CHAMFERS, CORNER FORMERS, GROOVES, BLOCKOUTS AND INSERTS; PAVING, SITE WORK, CURBS AND SITE WALLS.
   DIMENSIONS NOT SHOWN ON STRUCTURAL DRAWINGS.
   SIZE AND LOCATION OF OPENINGS THRU ROOF AND FLOOR.
6. ALL EXTERIOR WALLS AND INTERIOR BEARING/SHEARWALLS SHALL BE 6" X 18 GAGE STEEL STUDS AT 16" O.C. PER TYPICAL STEEL STUD FRAMING DETAILS U.N.O.

NOTE:
SEE ARCHITECTURAL AND CIVIL SITE DRAWINGS FOR ALL SITE SCREEN WALLS, SITE RETAINING WALLS, RAMPS, STAIRS, EXTERIOR CONCRETE WORK, ETC., TYPICAL.

FOUNDATION PLAN NOTES

1. SEE TYPICAL DETAIL AND STRUCTURAL NOTES FOR EARTHWORK REQUIREMENTS.
2. 8" CONCRETE SLAB OVER 6" A.B.C., TYPICAL AT APPARATUS BAY. REINFORCE WITH BOTH FIBER MESH AND #4 AT 18" O.C. (LAP 2'-0" MINIMUM) 2 1/4" CLEAR FROM TOP OF SLAB.
3. 4" CONCRETE SLAB OVER 4" A.B.C. REINFORCE WITH #4 AT 18" O.C. (1 3/4" CLEAR FROM TOP OF SLAB), TYPICAL U.N.O.
4. SEE ARCHITECTURAL AND CIVIL DRAWINGS FOR LOCATIONS AND LIMITS OF SITE WORK, SIDEWALKS, SLAB JOINTS, FINISH, SLOPES, CURBS, SITE WALLS, SITE RETAINING WALLS, ETC.
5. AREA INDICATES DEPRESSED SLAB – COORDINATE EXACT DIMENSIONS AND DEPTH WITH ARCHITECTURAL DRAWINGS.
6. MCJ INDICATES MASONRY CONTROL JOINT PER TYPICAL DETAIL.
7. CTJ INDICATES SLAB CONTROL JOINT. CJ INDICATES SLAB CONSTRUCTION JOINT.
8. SEE CIVIL DRAWINGS AND ARCHITECTURAL SITE PLAN FOR CONCRETE APRON SLAB/CONCRETE PAVEMENT AND JOINTS (COORDINATE WITH DETAIL 103).
9. PROVIDE 1/2" PREFORMED JOINT FILLER AT ALL LOCATIONS WHERE EXTERIOR SLABS ABUT THE BUILDING U.N.O. ON ARCHITECTURAL DRAWINGS.
10. – INDICATES SOLID GROUTED WALL FULL HEIGHT. FULLY MORTAR ALL HEAD JOINTS.
11. SLOPE SLAB TO DRAIN – SEE ARCHITECTURAL AND MECHANICAL/PLUMBING DRAWINGS.
12. ALL HORIZONTAL REINFORCING IN FOOTINGS, STEM WALLS AND WALLS SHALL BE CONTINUOUS AROUND ALL CORNERS AND INTERSECTIONS PER TYPICAL DETAILS.
13. CONCRETE CLOSURE POUR – TYPICAL AT ALL COLUMNS U.N.O. – SEE TYPICAL DETAIL.
14. 4" CONCRETE SLAB OVER 4" A.B.C.
15. FLOOR DRAIN – FOR EXACT LOCATION, ETC., SEE ARCHITECTURAL AND MECHANICAL/PLUMBING DRAWINGS.
16. PROVIDE #5 VERTICAL BAR FULL HEIGHT IN (3) ADJACENT CELLS CENTERED UNDER BEAM BEARING.
17. PROVIDE (2) #5 VERTICAL BAR FULL HEIGHT AT END CELL.
18. WELD DOUBLE END STUDS TO STEEL COLUMN WITH 2" LONG 1/8" FILLET WELD AT 12" O.C. EACH SIDE STAGGERED.

FRAMING PLAN NOTES

1. 5/8" PLYWOOD SHEATHING – TYPICAL AT ROOFS. FOR LAYUP AND ATTACHMENT, SEE STRUCTURAL NOTES AND TYPICAL DETAILS.
2. 3 ROWS MINIMUM OF BOTTOM CHORD BRIDGING AT 1/4 JOIST SPAN POINTS. ALL STRUT BRACING, CROSS BOTTOM CHORD BEARING CONDITIONS BRACING AT AND BOTTOM CHORD BRIDGING SHALL BE DESIGNED AND PROVIDED BY THE JOIST MANUFACTURER.
3. SHADED AREA INDICATES OVERFRAMING PER DETAIL 225.
4. MECHANICAL UNITS – TYPICAL. THE WEIGHTS AND LOCATIONS OF MECHANICAL UNITS SHOWN ARE APPROXIMATE AND NOT ALL UNITS MAY BE SHOWN ON THIS PLAN. FOR EXACT WEIGHTS, LOCATIONS, DUCT OPENINGS, ADDITIONAL UNITS, ETC., SEE MECHANICAL AND ARCHITECTURAL DRAWINGS. PROVIDE ADDITIONAL JOISTS AS REQUIRED BY THE JOIST MANUFACTURER. PROVIDE DOUBLE JOISTS BELOW ALL MECHANICAL UNITS.
5. MCJ INDICATES MASONRY CONTROL JOINT PER TYPICAL DETAIL.
6. 5 ROWS MINIMUM OF TOP CHORD ERECTION STRUT BRACING AT 1/6 JOIST SPAN POINTS. ALL STRUT BRACING SHALL BE DESIGNED AND PROVIDED BY THE JOIST MANUFACTURER.
7. 2 CONTINUOUS ROWS OF SIMPSON TB TENSION BRIDGING AT 1/3 JOIST SPAN POINTS.
8. SIMPSON CMSTC16 STRAP WITH 16d NAILS AT 3" O.C. PROVIDE 2 X BLOCKING LAID FLAT AS REQUIRED. EXTEND OVER SHEARWALL 4'-6" MINIMUM.
9. (1) CONTINUOUS ROW OF SIMPSON TB TENSION BRIDGING AT MIDSPAN.
10. ROOF HATCH – FOR FRAMING, SEE TYPICAL DETAILS. FOR SIZE AND LOCATION, SEE ARCHITECTURAL DRAWINGS.

Grenier Engineering, Inc.
Structural and Civil Engineering Consultants
PROJECT NO. GE 06202
4515 S. McClintock Dr. #211 TEMPE, ARIZONA 85282 TEL: (480) 831-1170 FAX: (480) 831-1138

THIS DRAWING IS NOT TO BE USED FOR CONSTRUCTION PURPOSES UNTIL SEALED AND SIGNED BY ENGINEER OF RECORD. REUSE OR REPRODUCTION WITHOUT WRITTEN PERMISSION IS PROHIBITED. ©

HUNT & CARAWA
Architects, ltd.
7145 North 57th Drive
Glendale, Arizona 85301
Voice (623) 934-4090 Fax (623) 934-4501

Arizona Army National Guard
Silverbell Fire Station 361
For
AZ Department of Emergency and Military Affairs

ADD ALTERNATES

Revisions:

Drawn by: SG
Checked by: JG
Scale:
Date: 8/17/06

JOB # 06002

SHEET
S2-1.1

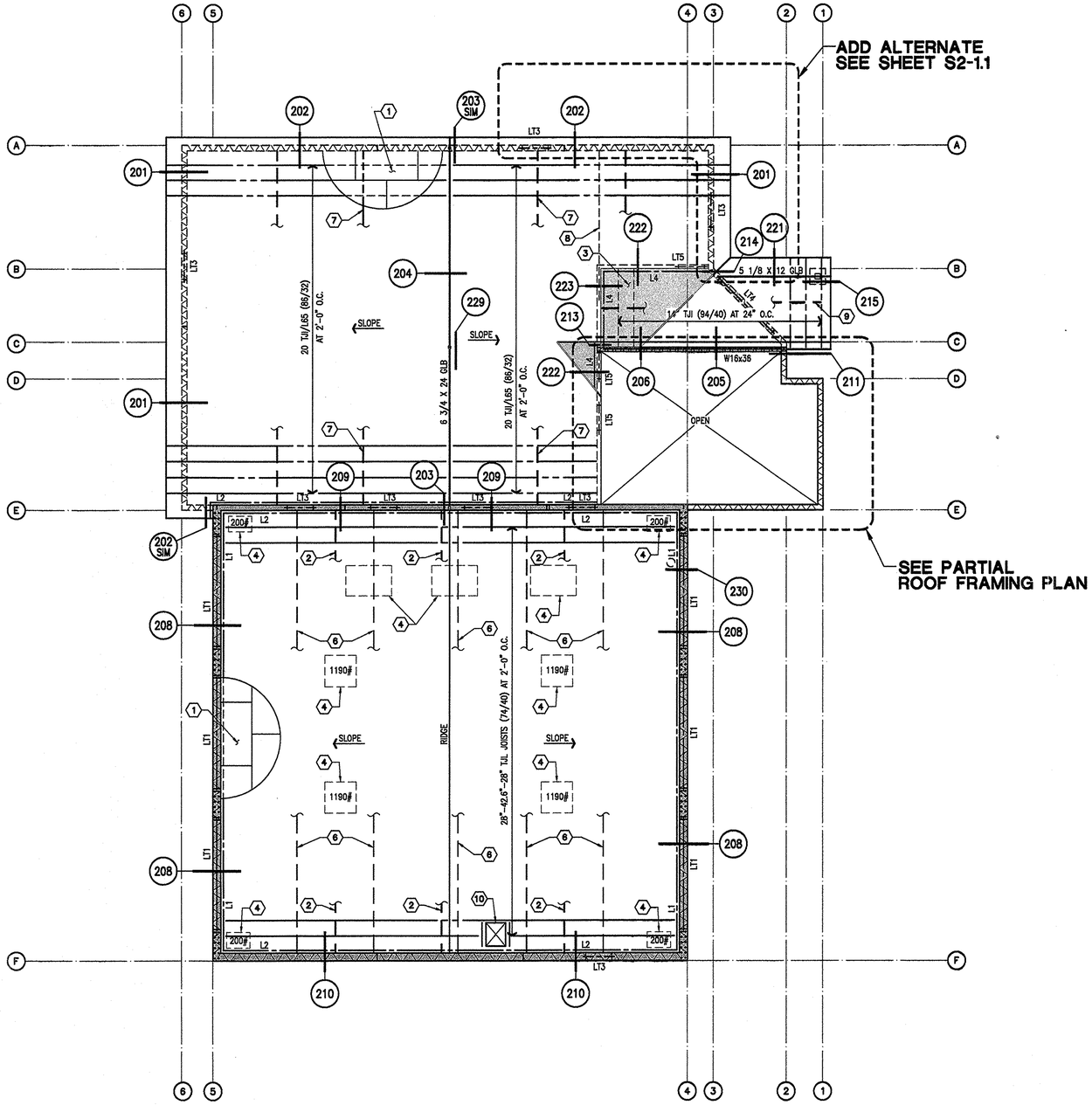

ROOF FRAMING PLAN

SCALE: 1/8" = 1'-0"

FRAMING SCHEDULES

LINTEL SCHEDULE

MARK	TYPE	LINTEL SIZE	REMARKS
LT1	"C"	W16 X 36	SEE DETAIL 22
LT2	"D"	(2) 600S200-43 UNPUNCHED LIGHT GAGE BOXED HEADER	SEE DETAIL 45
LT3	"A"	8" CMU H = 24" WITH (2) #5 BOTTOM	SEE DETAIL 21
LT4	"A"	12" CMU H = 32" WITH (2) #5 BOTTOM	SEE DETAIL 21

LEDGER SCHEDULE

MARK	LEDGER SIZE	CONNECTION	REMARKS
L1	4 X 12	1" ø ANCHOR BOLTS AT 16" O.C.	–
L2	3 X 8	3/4" ø ANCHOR BOLTS AT 48" O.C.	–
L3	3 X 8	3/4" ø ANCHOR BOLTS AT 32" O.C.	–
L4	2 X 10	(3) #10 SCREWS AND L70 EACH STUD	–
L5	L 3 X 3 X 1/4	3/4"ø ANCHOR BOLT AT 32" O.C.	–

GENERAL NOTES

1. VERIFY ALL DIMENSIONS WITH ARCHITECTURAL DRAWINGS PRIOR TO CONSTRUCTION.
2. SEE SHEET S1-1.0 FOR STRUCTURAL NOTES (MATERIALS, REQUIREMENTS, ETC.).
3. PROVIDE CONSTRUCTION JOINTS IN FOOTINGS IN ACCORDANCE WITH TYPICAL DETAILS.
4. CONTROL/CONSTRUCTION JOINTS IN EXTERIOR SLABS SHALL BE LOCATED BY THE CONTRACTOR AS REQUIRED TO MINIMIZE AND CONTROL SHRINKAGE CRACKING
5. SEE ARCHITECTURAL DRAWINGS FOR THE FOLLOWING:
   SIZE AND LOCATION OF ALL DOOR AND WINDOW OPENINGS.
   SIZE AND LOCATION OF ALL INTERIOR AND EXTERIOR NON-BEARING PARTITIONS.
   SIZE AND LOCATION OF ALL CONCRETE CURBS, EXTERIOR SLABS, EXTERIOR SLAB JOINTS; FLOOR AND ROOF DRAINS, SLOPES AND DEPRESSED AREAS; CHANGES IN LEVEL; CHAMFERS, CORNER FORMERS, GROOVES, BLOCKOUTS AND INSERTS; PAVING, SITE WORK, CURBS AND SITE WALLS.
   DIMENSIONS NOT SHOWN ON STRUCTURAL DRAWINGS.
   SIZE AND LOCATION OF OPENINGS THRU ROOF AND FLOOR.

NOTE:
FOR ALL VERTICAL DIMENSIONS TOJ, TOB, TOP, TOW AND TOL COORDINATE WITH ARCHITECTURAL DRAWINGS PRIOR TO CONSTRUCTION.

NOTE:
SEE ARCHITECTURAL AND CIVIL SITE DRAWINGS FOR ALL SITE SCREEN WALLS, SITE RETAINING WALLS, RAMPS, STAIRS, EXTERIOR CONCRETE WORK, ETC., TYPICAL.

FRAMING PLAN NOTES

1. 5/8" PLYWOOD SHEATHING – TYPICAL AT ROOFS. FOR LAYUP AND ATTACHMENT, SEE STRUCTURAL NOTES AND TYPICAL DETAILS.
2. 3 ROWS MINIMUM OF BOTTOM CHORD BRIDGING AT 1/4 JOIST SPAN POINTS. ALL STRUT BRACING, CROSS BOTTOM CHORD BEARING CONDITIONS BRACING AT AND BOTTOM CHORD BRIDGING SHALL BE DESIGNED AND PROVIDED BY THE JOIST MANUFACTURER.
3. SHADED AREA INDICATES OVERFRAMING PER DETAIL 225.
4. MECHANICAL UNITS – TYPICAL. THE WEIGHTS AND LOCATIONS OF MECHANICAL UNITS SHOWN ARE APPROXIMATE AND NOT ALL UNITS MAY BE SHOWN ON THIS PLAN. FOR EXACT WEIGHTS, LOCATIONS, DUCT OPENINGS, ADDITIONAL UNITS, ETC., SEE MECHANICAL AND ARCHITECTURAL DRAWINGS. PROVIDE ADDITIONAL JOISTS AS REQUIRED BY THE JOIST MANUFACTURER. PROVIDE DOUBLE JOISTS BELOW ALL MECHANICAL UNITS.
5. MCJ INDICATES MASONRY CONTROL JOINT PER TYPICAL DETAIL.
6. 5 ROWS MINIMUM OF TOP CHORD ERECTION STRUT BRACING AT 1/6 JOIST SPAN POINTS. ALL STRUT BRACING SHALL BE DESIGNED AND PROVIDED BY THE JOIST MANUFACTURER.
7. 2 CONTINUOUS ROWS OF SIMPSON TB TENSION BRIDGING AT 1/3 JOIST SPAN POINTS.
8. SIMPSON CMSTC16 STRAP WITH 16d NAILS AT 3" O.C. PROVIDE 2 X BLOCKING LAID FLAT AS REQUIRED. EXTEND OVER SHEARWALL 4'-6" MINIMUM.
9. (1) CONTINUOUS ROW OF SIMPSON TB TENSION BRIDGING AT MIDSPAN.
10. ROOF HATCH – FOR FRAMING, SEE TYPICAL DETAILS. FOR SIZE AND LOCATION, SEE ARCHITECTURAL DRAWINGS.

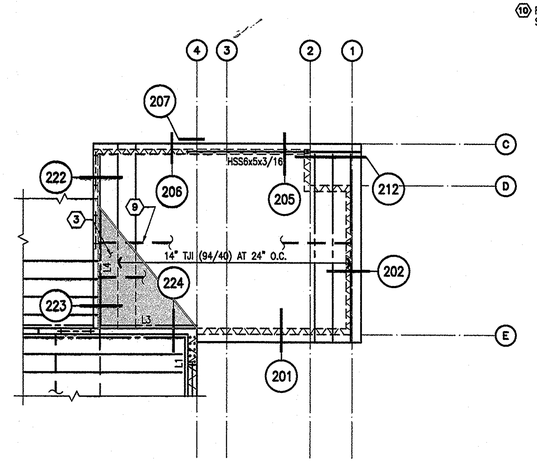

PARTIAL ROOF FRAMING PLAN

SCALE: 1/8" = 1'-0"

HUNT & CARAWA
Architects, ltd.
7145 North 57th Drive
Glendale, Arizona 85301
Voice (623) 934-4090 Fax (623) 934-4501

Arizona Army National Guard
Silverbell Fire Station 361
For
AZ Department of Emergency and Military Affairs

ROOF FRAMING PLAN

Revisions:

Drawn by: SG
Checked by: JG
Scale:
Date: 8/11/06

JOB # 06002

SHEET S3-1.0

Grenier Engineering, Inc.
Structural and Civil Engineering Consultants
PROJECT NO. GE 06202
4515 S. McClintock Dr. #211 TEMPE, ARIZONA 85282 TEL: (480) 831-1170 FAX: (480) 831-1136

THIS DRAWING IS NOT TO BE USED FOR CONSTRUCTION PURPOSES UNTIL SEALED AND SIGNED BY ENGINEER OF RECORD. REUSE OR REPRODUCTION WITHOUT WRITTEN PERMISSION IS PROHIBITED. ©

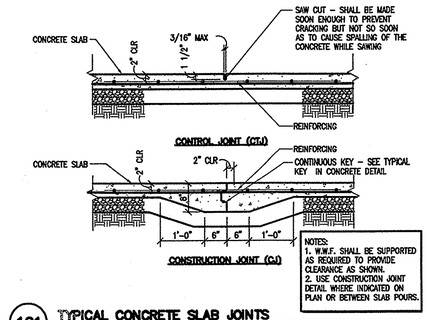

101 TYPICAL CONCRETE SLAB JOINTS 2.02.001A

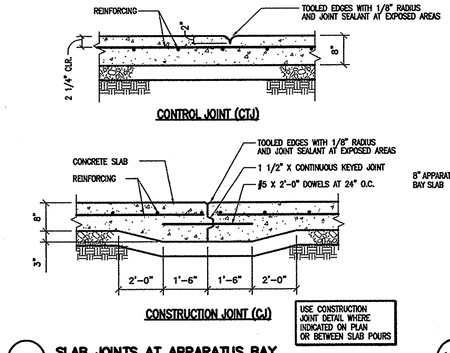

102 SLAB JOINTS AT APPARATUS BAY (SIMILAR AT EXTERIOR CONCRETE PAVEMENT) 2.02.005 BR

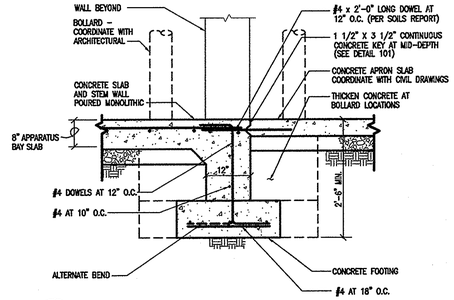

103 CONCRETE SLAB EDGE AT APPARATUS BAY 2.02.007 BR

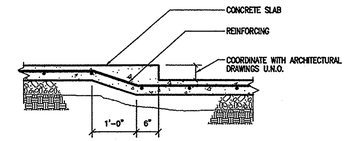

104 DEPRESSION IN SLAB ON GRADE 2.02.010A

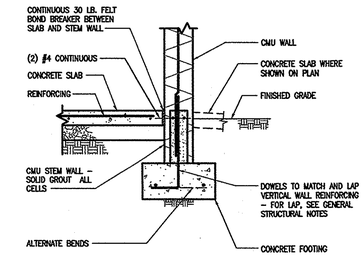

105 EXTERIOR CMU WALL FOOTING 4.02.001A

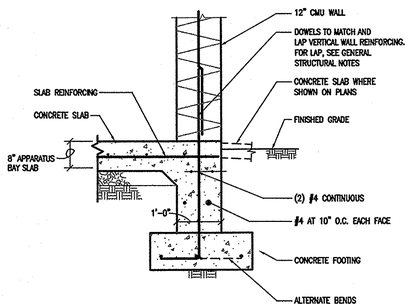

106 EXTERIOR CMU WALL FOOTING 2.03.004BR

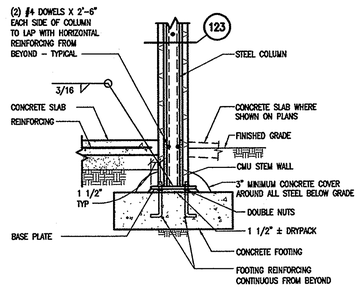

107 EXTERIOR STEEL COLUMN FOOTING AT CMU WALL 5.02.023AR

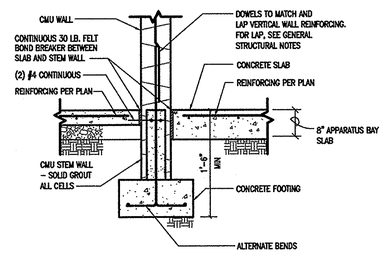

108 INTERIOR CMU WALL FOOTING 2.03.027 B

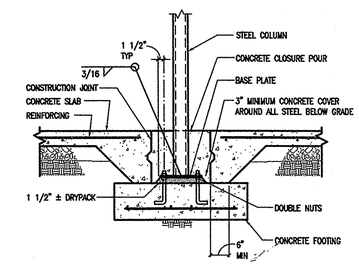

109 INTERIOR STEEL COLUMN FOOTING 5.02.001A

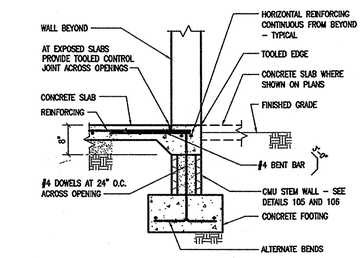

110 EXTERIOR FOOTING AT WALL OPENING 2.03.041 BR

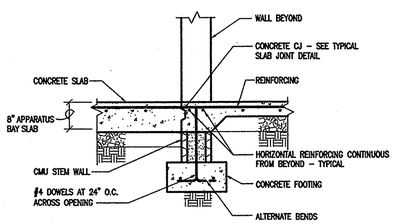

111 INTERIOR FOOTING AT WALL OPENING 2.03.043 BR

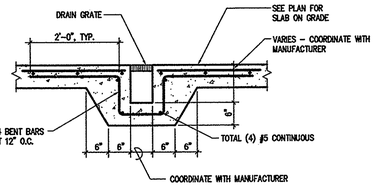

112 TRENCH DRAIN 2.15.006R

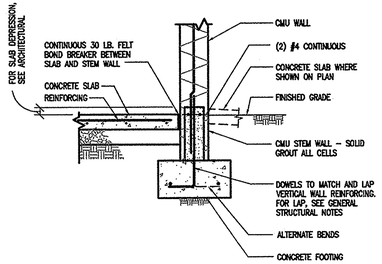

113 DEPRESSED CONCRETE SLAB AT EXTERIOR CMU WALL FOOTING 4.02.007A

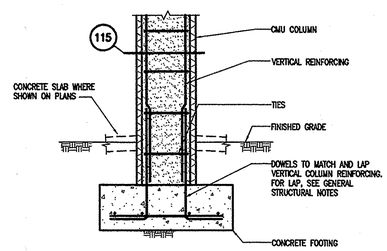

114 EXTERIOR CMU COLUMN FOOTING 4.02.060

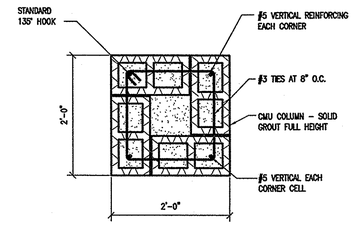

115 PLAN VIEW – CMU COLUMN 4.14.004R

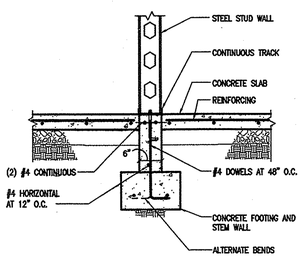

116 INTERIOR STEEL STUD WALL FOOTING 5.52.020R

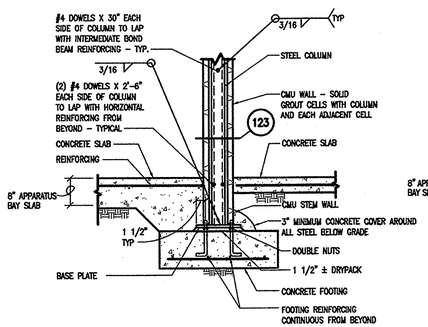

117 EXTERIOR STEEL COLUMN FOOTING AT CMU WALL 2.07.020 B

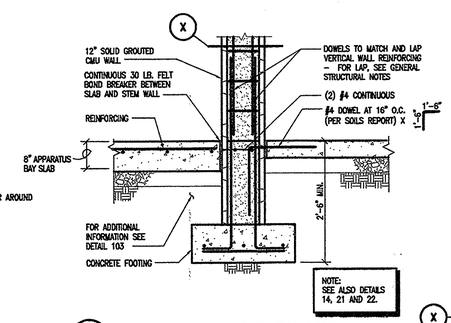

118 WALL PIERS AT APPARATUS BAY 2.03.002 BR

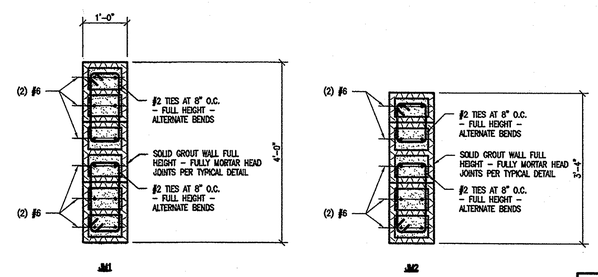

X SECTION

THIS DRAWING & THE DATA CONTAINED HEREIN ARE THE PROPERTY OF HUNT & CARAWAY ARCHITECTS, LTD. AND MAY NOT BE USED, REPRODUCED, COPIED, OR TRANSFERRED WITHOUT THE WRITTEN CONSENT OF THE PROPRIETOR AND/OR COMPANY REPRESENTATIVE. NOR SHALL ANY DATA OR INFORMATION CONTAINED HEREIN BE USED IN PART OR IN FULL FOR ANY PURPOSE OTHER THAN THAT PRESCRIBED WITHIN THESE DOCUMENTS.

HUNT & CARAWA
Architects, ltd.
7145 North 57th Drive
Glendale, Arizona 85301
Voice (623) 934-4090 Fax (623) 934-4501

Arizona Army National Guard
Silverbell Fire Station 361
For
AZ Department of Emergency and Military Affairs

FOUNDATION DETAILS

Revisions:

Drawn by: SG
Checked by: JG
Scale:
Date: 8/17/06

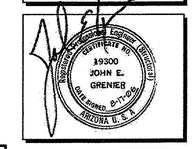

JOB # 06002

SHEET S4-1.0

Grenier Engineering, Inc.
Structural and Civil Engineering Consultants
PROJECT NO. GE 06202
4515 S. McClintock Dr. #211 TEMPE, ARIZONA 85282 TEL: (480) 831-1170 FAX: (480) 831-1136

THIS DRAWING IS NOT TO BE USED FOR CONSTRUCTION PURPOSES UNTIL SEALED AND SIGNED BY ENGINEER OF RECORD. REUSE OR REPRODUCTION WITHOUT WRITTEN PERMISSION IS PROHIBITED. ©

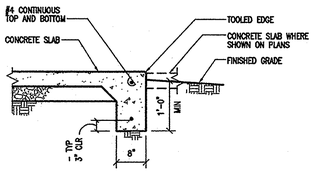

121 TYPICAL CONCRETE SLAB TOEDOWN 2.02.030

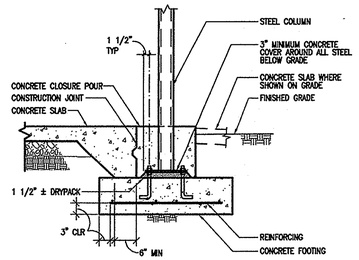

122 STEEL TUBE COLUMN FOOTING 5.02.007R

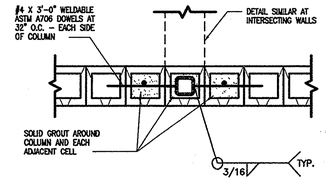

123 PLAN VIEW BOND BEAM AT STEEL COLUMN 4.01.060

THIS DRAWING & THE DATA CONTAINED HEREIN ARE THE PROPERTY OF HUNT & CARAWAY ARCHITECTS, LTD. AND MAY NOT BE USED, REPRODUCED, COPIED, OR TRANSFERRED WITHOUT THE WRITTEN CONSENT OF THE PROPRIETOR AND/OR COMPANY REPRESENTATIVE. NOR SHALL ANY DATA OR INFORMATION CONTAINED HEREIN BE USED IN PART OR IN FULL FOR ANY PURPOSE OTHER THAN THAT DESCRIBED WITHIN THESE DOCUMENTS.

HUNT & CARAWA
Architects, ltd.
7145 North 57th Drive
Glendale, Arizona 85301
Voice (623) 934-4090 Fax (623) 934-4501

Arizona Army National Guard
Silverbell Fire Station 361
For
AZ Department of Emergency and Military Affairs

FOUNDATION DETAILS

Revisions:

Drawn by: SG
Checked by: JG
Scale:
Date: 3/17/06

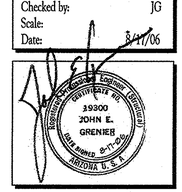

JOB #
06-002

SHEET
S4-1.1

Grenier Engineering, Inc.
Structural and Civil Engineering Consultants
PROJECT NO. GE 06202
4515 S. McClintock Dr. #211 TEMPE, ARIZONA 85282 TEL: (480) 831-1170 FAX: (480) 831-1136

THIS DRAWING IS NOT TO BE USED FOR CONSTRUCTION PURPOSES UNTIL SEALED AND SIGNED BY ENGINEER OF RECORD. REUSE OR REPRODUCTION WITHOUT WRITTEN PERMISSION IS PROHIBITED. ©

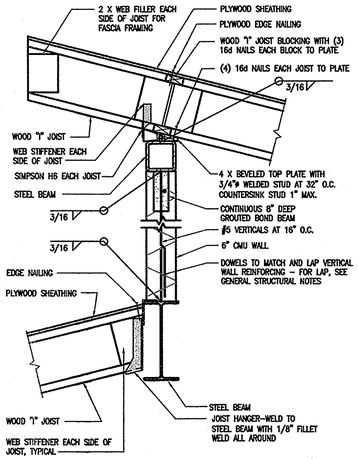

205 CMU WALL BEARING AT STEEL BEAM
4.10.062R

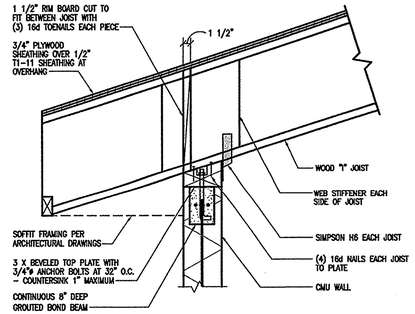

201 WOOD JOIST AT CMU WALL
6.03.006R

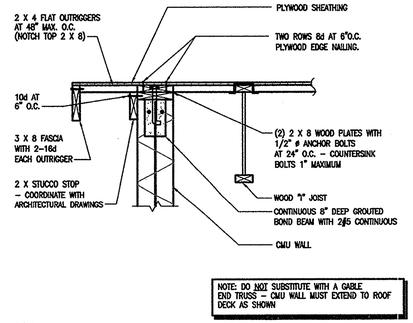

NOTE: DO NOT SUBSTITUTE WITH A GABLE END TRUSS – CMU WALL MUST EXTEND TO ROOF DECK AS SHOWN

202 PLYWOOD SHEATHING AT CMU WALL
6.03.004

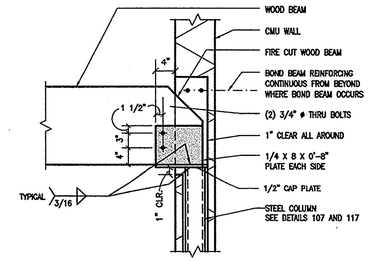

203 WOOD BEAM AT COLUMN IN CMU WALL
6.05.079R

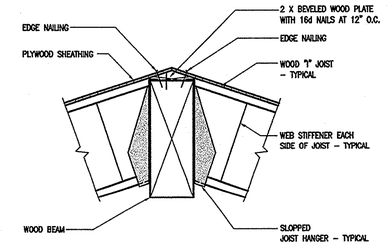

204 WOOD "I" JOIST AT WOOD BEAM
6.07.088R

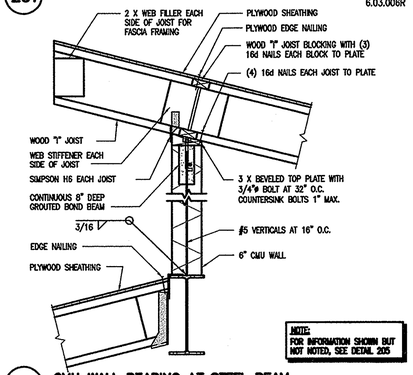

NOTE: FOR INFORMATION SHOWN BUT NOT NOTED, SEE DETAIL 205

206 CMU WALL BEARING AT STEEL BEAM
4.10.062R

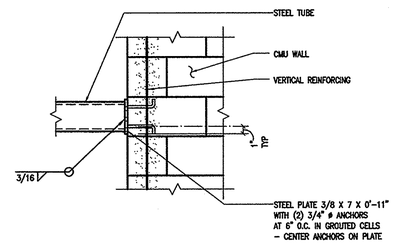

207 STEEL TUBE CONNECTION TO CMU WALL
4.10.005R

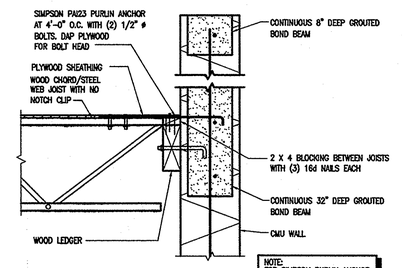

NOTE: FOR SIMPSON PURLIN ANCHOR EMBEDMENT, NAILING AND REINFORCING REQUIREMENTS – SEE TYPICAL DETAIL 47

208 WOOD CHORD/STEEL WEB JOIST AT CMU WALL
6.08.001R

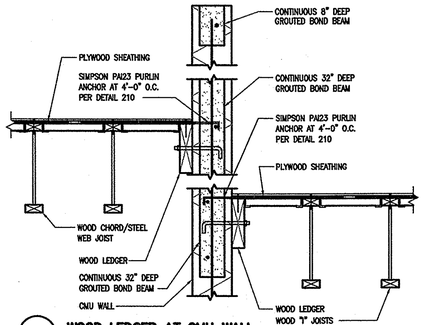

209 WOOD LEDGER AT CMU WALL
6.07.088R

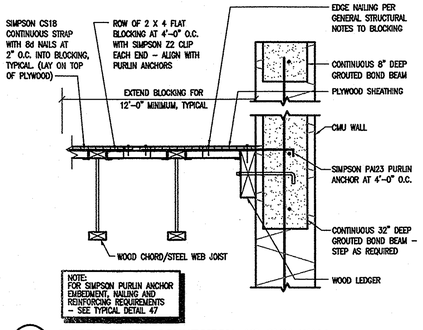

NOTE: FOR SIMPSON PURLIN ANCHOR EMBEDMENT, NAILING AND REINFORCING REQUIREMENTS – SEE TYPICAL DETAIL 47

210 WOOD LEDGER CONNECTION AT CMU WALL
6.07.054R

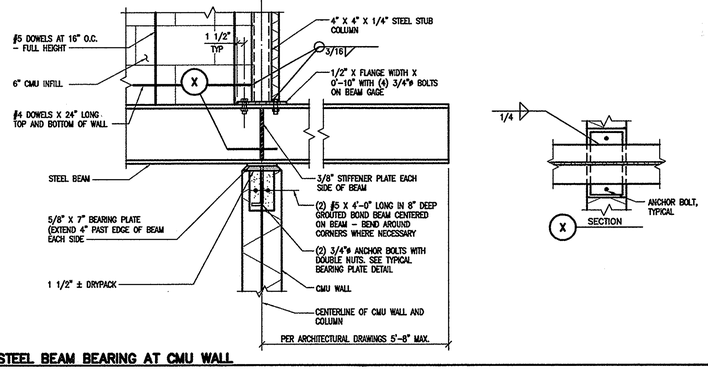

211 STEEL BEAM BEARING AT CMU WALL
4.10.030R

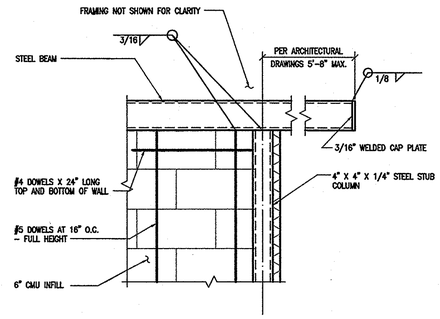

212 STEEL TUBE BEARING AT STEEL COLUMN
4.10.001R

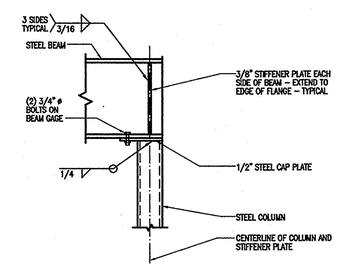

213 STEEL BEAM CONNECTION AT STEEL COLUMN
5.10.110R

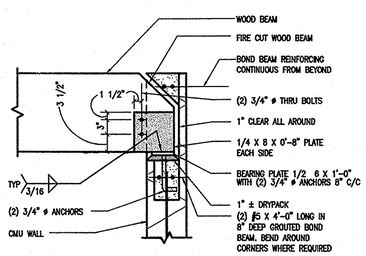

214 WOOD BEAM AT CMU WALL
4.07.026

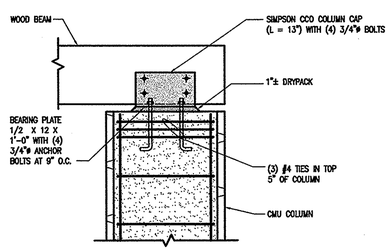

215 WOOD BEAM AT CMU COLUMN
4.07.061R

HUNT & CARAWA
Architects, ltd.
7145 North 57th Drive
Glendale, Arizona 85301
Voice (623) 934-4090 Fax (623) 934-4501

Arizona Army National Guard
Silverbell Fire Station 361
For
AZ Department of Emergency and Military Affairs

FRAMING DETAILS

Revisions:

Drawn by: SG
Checked by: JG
Scale:
Date: 8/4/06

JOB # 06-002

SHEET S5-1.0

Grenier Engineering, Inc.
Structural and Civil Engineering Consultants
PROJECT NO. GE 06202
4515 S. McClintock Dr. #211 TEMPE, ARIZONA 85282 TEL: (480) 831-1170 FAX: (480) 831-1136

THIS DRAWING IS NOT TO BE USED FOR CONSTRUCTION PURPOSES UNTIL SEALED AND SIGNED BY ENGINEER OF RECORD. REUSE OR REPRODUCTION WITHOUT WRITTEN PERMISSION IS PROHIBITED. ©

THIS DRAWING © THIS DATA CONTAINED HEREIN ARE THE PROPERTY OF HUNT & CARAWAY ARCHITECTS, LTD. AND MAY NOT BE USED, REPRODUCED, COPIED, OR TRANSFERRED WITHOUT THE WRITTEN CONSENT OF THE PROPRIETOR AND/OR COMPANY REPRESENTATIVE. NOR SHALL ANY DATA OR INFORMATION CONTAINED HEREIN BE USED IN PART OR IN FULL FOR ANY PURPOSE OTHER THAN THAT DESCRIBED WITHIN THESE DOCUMENTS.

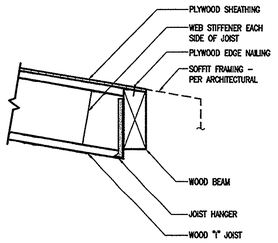

221 WOOD "I" JOIST AT WOOD BEAM

6.54.029R

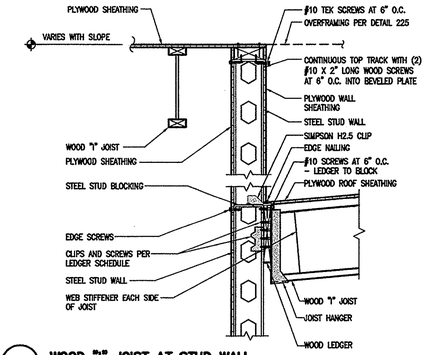

222 WOOD "I" JOIST AT STUD WALL

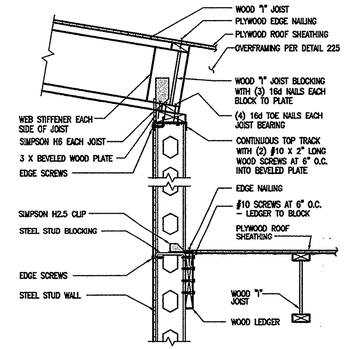

223 WOOD "I" JOIST AT STEEL STUD WALL

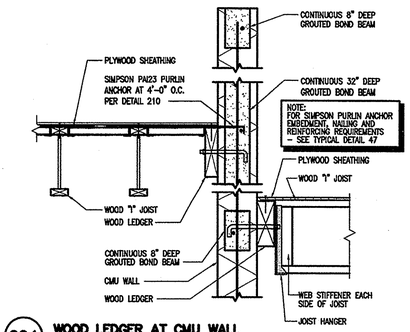

224 WOOD LEDGER AT CMU WALL

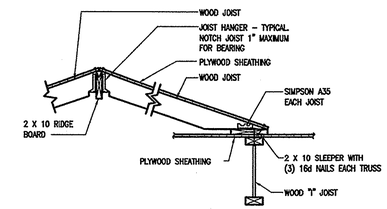

225 OVERFRAMING AT WOOD "I" JOISTS

6.62.018

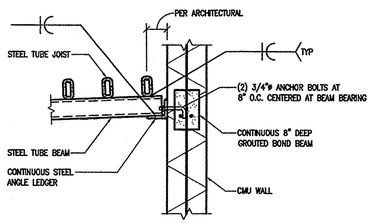

226 STEEL BEAM TO CMU WALL

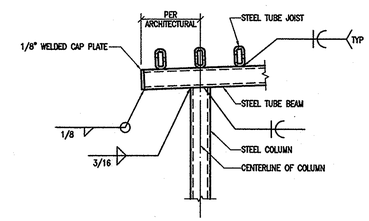

227 STEEL BEAM TO STEEL COLUMN

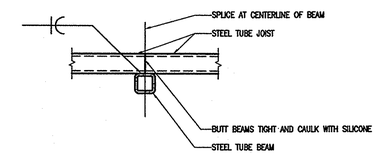

228 STEEL BEAM TO STEEL TUBE JOIST

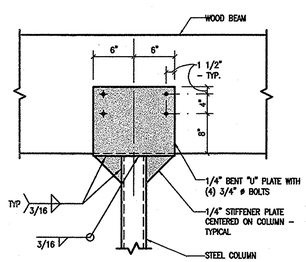

229 WOOD BEAM CONNECTION TO STEEL COLUMN

5.07.026R

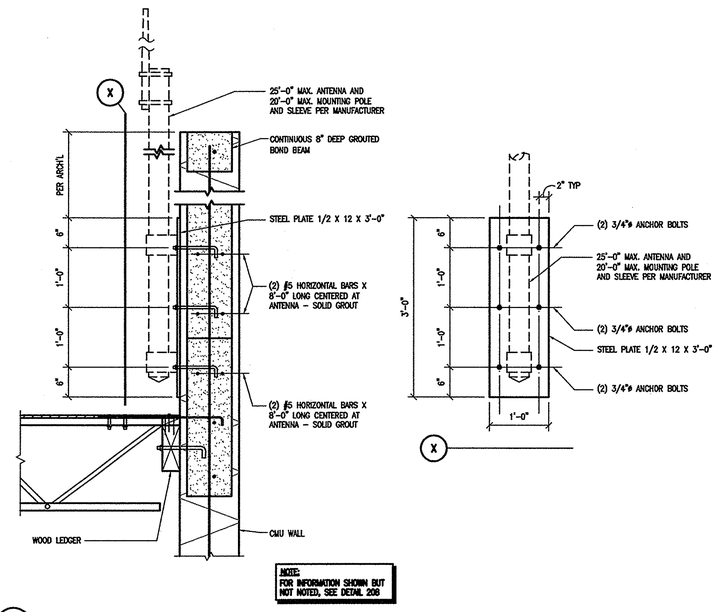

NOTE:
FOR INFORMATION SHOWN BUT NOT NOTED, SEE DETAIL 208

230 WOOD CHORD/STEEL WEB JOIST AT CMU WALL

6.08.001R

THIS DRAWING & THE DATA CONTAINED HEREIN ARE THE PROPERTY OF HUNT & CARAWAY ARCHITECTS, LTD. AND MAY NOT BE USED, REPRODUCED, COPIED, OR TRANSFERRED WITHOUT THE WRITTEN CONSENT OF THE PROPRIETOR AND/OR COMPANY REPRESENTATIVE. NOR SHALL ANY DATA OR INFORMATION CONTAINED HEREIN BE USED IN PART OR IN FULL FOR ANY PURPOSE OTHER THAN THAT DESCRIBED WITHIN THESE DOCUMENTS.

HUNT & CARAWA
Architects, ltd.
7145 North 57th Drive
Glendale, Arizona 85301
Voice (623) 934-4090 Fax (623) 934-4501

Arizona Army National Guard
Silverbell Fire Station 361
For
AZ Department of Emergency and Military Affairs

FRAMING DETAILS

Revisions:

Drawn by: SG
Checked by: JG
Scale:
Date: 8/21/06

JOB # 06002

SHEET
S5-1.1

Grenier Engineering, Inc.
Structural and Civil Engineering Consultants
PROJECT NO. GE 06202
4515 S. McClintock Dr. #211 TEMPE, ARIZONA 85282 TEL: (480) 831-1170 FAX: (480) 831-1136

THIS DRAWING IS NOT TO BE USED FOR CONSTRUCTION PURPOSES UNTIL SEALED AND SIGNED BY ENGINEER OF RECORD. REUSE OR REPRODUCTION WITHOUT WRITTEN PERMISSION IS PROHIBITED. ©

THIS DRAWING & THE DATA CONTAINED HEREIN ARE THE PROPERTY OF HUNT & CARAWAY ARCHITECTS, LTD. AND MAY NOT BE USED REPRODUCED, COPIED, OR TRANSFERRED WITHOUT THE WRITTEN CONSENT OF THE PROPRIETOR AND/OR COMPANY REPRESENTATIVE NOR SHALL ANY DATA OR INFORMATION CONTAINED HEREIN BE USED IN PART OR IN FULL FOR ANY PURPOSE OTHER THAN THAT DESCRIBED WITHIN THESE DOCUMENTS.

H:\26016\MOD6-M2-1.dwg

KEY NOTES

1. 14 X 22 SUPPLY AND RETURN AIR DUCT DOWN THRU ROOF WITH FLASHING
2. TYPICAL UNIT HEATER.
3. 3/4" CONDENSATE DRAIN DOWN IN WALL, TO SINK TAIL PIECE.
4. RELIEF LOUVER, 48" WIDE X 36" HIGH AT +16' AFF, 5.73 SQUARE FEET FREE AREA.
5. EXHAUST DUCT DOWN WALL. SEE DETAIL
6. HOLD TIGHT TO BOTTOM OF STRUCTURE.
7. TYPICAL EVAPORATIVE COOL DUCT DOWN THRU ROOF FOR DIFFUSE.
8. EXHAUST DUCT UP THRU ROOF TO EXHAUST FAN.
9. PROVIDE 7"ø EXHAUST DUCT UP THRU ROOF WITH APPROVED FLASHING AND CAP. INSTALL TO MANUFACTURERS WRITTEN INSTRUCTION

HUNT & CARAWAY
Architects, ltd.
7145 North 57th Drive
Glendale, Arizona 85301
Voice (623) 934-4090 Fax (623) 934-4501

GENERAL NOTE:

A. PROVIDE U.L. LISTED FIRE/SMOKE DAMPER AT DUCT PENETRATION OF ALL FIRE RATED WALLS. REFER TO ARCHITECTURAL SHEETS FOR WALL LOCATIONS

B. PROVIDE RADIATION FIRE/SMOKE DAMPER CEILING DIFFUSERS IN THE SLEEPING ROOMS.

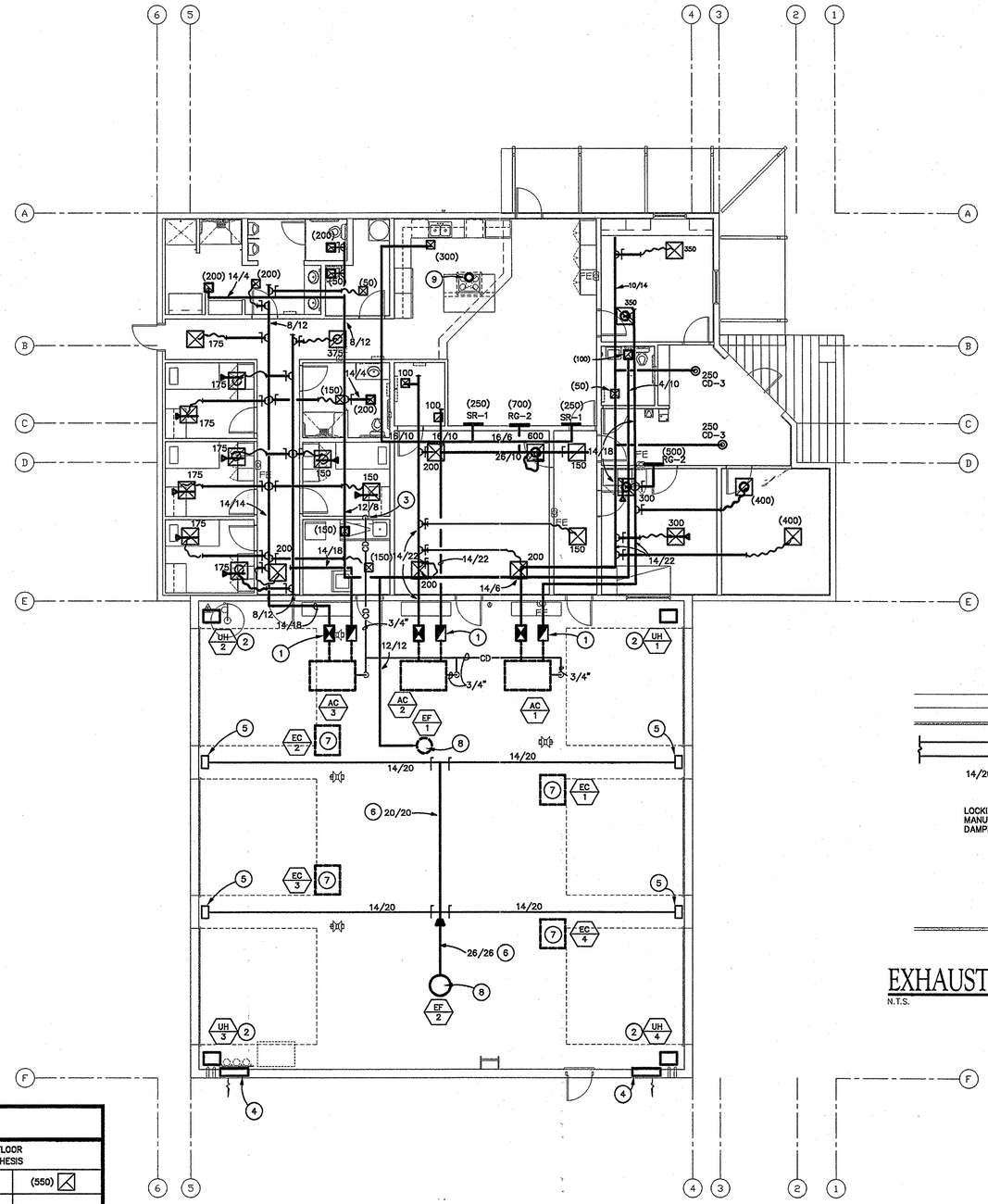

MECHANICAL FLOOR PLAN

SCALE: 1/8" = 1'-0"

N

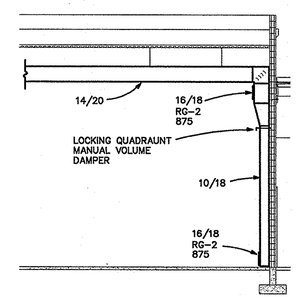

EXHAUST DUCT ELEVATION

N.T.S.

LEGEND

SYMBOL	DESCRIPTION
	DUCT THRU ROOF
	CEILING DIFFUSER
	CEILING RETURN
	CEILING EXHAUST
	SUPPLY REGISTER
	NEW DUCTWORK & AIR DEVICES
	DUCT TRANSITION
	45° HEEL CONNECTION
	CONICAL TAP W/ VOLUME DAMPER
	FLEX CONNECTION
	EXISTING MECHANICAL EQUIPMENT TO REMAIN
	EXISTING MECHANICAL EQUIPMENT TO BE REMOVED
	FIRE DAMPER
	COMBINATION FIRE/SMOKE DAMPER
CD	CONDENSATE DRAIN PIPING
T	SPACE TERMPERATURE SENSOR/THERMOSTAT
	POINT OF CONECTION NEW TO EXISTING
	IONIZATION/SMOKE DETECTOR
	PIPE UP
	PIPE DOWN
	SINGLE LINE DUCT TRANSITION AT WALL REGISTER SEE AIR DISTRIBUTION SCHEDULE ON MECH. PLANS.

AIR DISTRIBUTION SCHEDULE

CFM'S SHOWN ON FLOOR PLAN WITHOUT PARENTHESIS			CFM'S SHOWN ON FLOOR PLAN WITH PARENTHESIS			
	550	550		(550)	(550)	(550)
CFM	CEILING DIFFUSER NECK/TYPE	RETURN GRILLE NECK/TYPE	CFM	CEILING DIFFUSER	RETURN REGISTER	EXHAUST REGISTER
0–100	6"ø CD–1	8"ø RG–1	0–50	6X6 CD–2	6X6 RR–2	6X6 ER–1
101–220	8"ø CD–1	10"ø RG–1	51–350	12X12 CD–2	12X12 RR–2	12X12 ER–1
221–380	10"ø CD–1	12"ø RG–1	351–500	12X12 CD–2	18X18 RR–2	18X18 ER–1
381–600	12"ø CD–1	14"ø RG–1	501–750	15X15 CD–2	18X18 RR–2	18X18 ER–1
601–900	14"ø CD–1	16"ø RG–1	751–1300	18X18 CD–2	24X24 RR–2	24X24 ER–1
901–1100	16"ø CD–1	18"ø RG–1				

Arizona Army National Guard
Silverbell Fire Station 361
For
AZ Department of Emergency and Military Affairs

MECHANICAL FLOOR PLAN

Revisions:

Drawn by:	LJO
Checked by:	JM
Scale:	As Shown
Date:	07/14/06

Registered Professional Engineer (Mechanical) No. 26005 THOMAS G. BARR Date Signed 8/16/06 ARIZONA, U.S.A.

JOB # 06-002

SHEET M-2.1

Sullivan Designs, Inc.
Mechanical / Electrical Consulting Engineers
7878 North 16th Street Suite 270
Phoenix, Arizona 85020
Voice 602.943.8424 Fax 602.943.7931
26016

THIS DRAWING & THE DATA CONTAINED HEREIN ARE THE PROPERTY OF HUNT & CARAWAY ARCHITECTS, LTD. AND MAY NOT BE USED, REPRODUCED, COPIED, OR TRANSFERRED WITHOUT THE WRITTEN CONSENT OF THE PROPRIETOR AND/OR COMPANY REPRESENTATIVE. NOR SHALL ANY DATA OR INFORMATION CONTAINED HEREIN BE USED IN PART OR IN FULL FOR ANY PURPOSE OTHER THAN THAT DESCRIBED WITHIN THESE DOCUMENTS.

HUNT & CARAWAY
Architects, ltd.
7145 North 57th Drive
Glendale, Arizona 85301
Voice (623) 934-4090 Fax (623) 934-4501

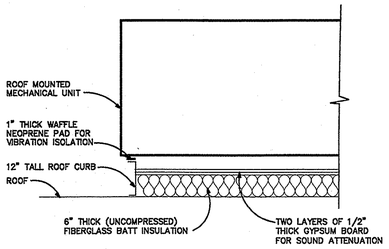

1 ROOF CURB FOR MECHANICAL EQUIPMENT DETAIL

N.T.S.

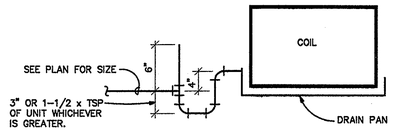

2 CONDENSATE DRAIN TRAP DETAIL

N.T.S.

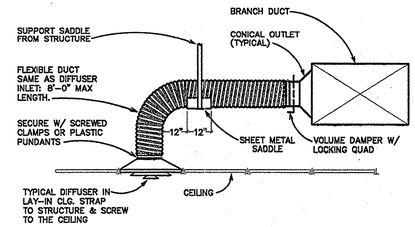

(NOTE: FOR FLEX. DUCT LENGTHS GREATER THAN 4')

3 TYPICAL FLEXIBLE DUCT SUPPORT DETAIL

N.T.S.

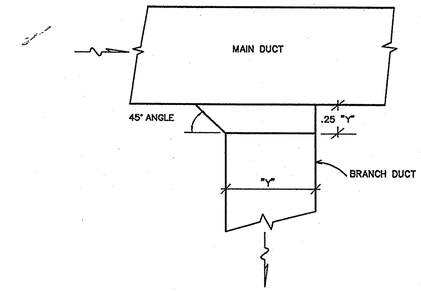

NOTE! DO NOT USE AIR EXTRACTORS IN BRANCH DUCT

4 45° BRANCH DUCT TAKE-OFF DETAIL

N.T.S.

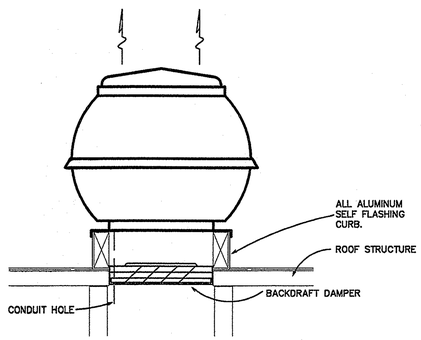

8 UPBLAST EXHAUST FAN DETAIL

N.T.S.

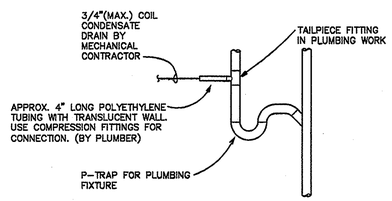

7 SINK TAILPIECE DETAIL

N.T.S.

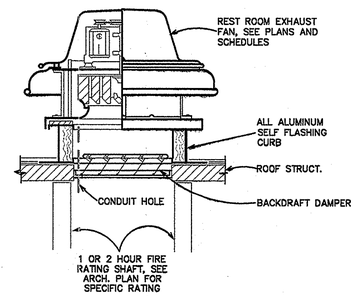

6 TOILET EXHAUST FAN DETAIL

N.T.S.

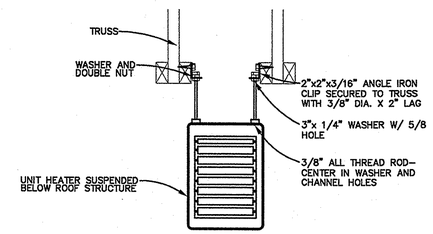

5 UNIT HEATER MOUNTING DETAIL

N.T.S.

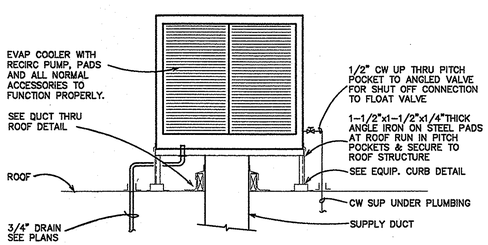

9 EVAPORATIVE COOLER DETAIL

N.T.S.

Arizona Army National Guard
Silverbell Fire Station 361
For
AZ Department of Emergency and Military Affairs

MECHANICAL DETAILS

Revisions:

Drawn by:	LJO
Checked by:	JM
Scale:	As Shown
Date:	07/14/06

26005
THOMAS C. BARR
Date Signed 07/14/06
ARIZONA, U.S.A.

JOB # 06-002

SHEET M-3.1

Sullivan Designs, Inc.
Mechanical / Electrical Consulting Engineers
7878 North 16th Street Suite 270
Phoenix, Arizona 85020
Voice 602.943.8424 Fax 602.943.7931
26016

THIS DRAWING
H:\DOCS\HUGO\HUG.dwg

THIS DRAWING & THE DATA CONTAINED HEREIN ARE THE PROPERTY OF HUNT & CARAWAY ARCHITECTS, LTD. AND MAY NOT BE USED, REPRODUCED, COPIED, OR TRANSFERRED WITHOUT THE WRITTEN CONSENT OF THE PROPRIETOR, AND/OR COMPANY REPRESENTATIVE. NOR SHALL ANY DATA OR INFORMATION CONTAINED HEREIN BE USED IN PART OR IN FULL FOR ANY PURPOSE OTHER THAN THAT DESCRIBED WITHIN THESE DOCUMENTS.

HUNT & CARAWAY
Architects, ltd.
7145 North 57th Drive
Glendale, Arizona 85301
Voice (623) 934-4090 Fax (623) 934-4501

PACKAGED HEAT PUMP UNIT SCHEDULE (AC *)

SYMBOL	AIR CAPACITIES TOTALOA CFM	AIR CAPACITIES CFM	ESP IWG	BLOWER HP	MIN ARI EER/SEER (BTUH/W)	CYCLE	NET INTEG. HEATING/NET COOLING CAPACITIES * ENT AIR DB	ENT AIR WB	AMBIENT DB	AMBIENT WB	NET BTUH TOTAL	NET BTUH SENSIBLE	ELECTRICAL DATA VOLT/ø	MCA	MOCP	MANUF & MODEL	WEIGHT (LBS)	REMARKS
1,2,3	1600	SEE PLAN	.50	.75	13.1	COOL	84	65	110	66	38.6	38.6	208/3	21.1	25	CARRIER 50HJQ005	550	PROVIDE FACTORY ROOF CURB, SINGLE POINT CONNECTION, BAROMETRIC RELIEF, 7 DAY PROGRAMMABLE THERMOSTAT, 2" 30% FILTERS & MANUAL O.S.A. DAMPER.
						HEAT	70		27		30.5							

EXHAUST FAN SCHEDULE (EF *)

SYMBOL	TYPE	CFM	ESP IWG	RPM	DRIVE	MOTOR HP	MOTOR VOLT/ø	MANUFACTURER AND MODEL	WEIGHT (LBS)	REMARKS
1	ROOF MTD.	850	.5	804	BELT	1/4	115/1	PENN DX-11-B	60	SWITCH AT BREAKER. FAN SHALL OPERATE CONTINUOUSLY.
2	ROOF MTD.	7,000	.75	625	BELT	2	208/1	PENN FX-30-B	225	INTERLOCK WITH BAY DOORS. FAN SHALL OPERATE WHEN DOORS ARE OPENED AND CONTINUE TO OPERATE FOR 10 MIN. AFTER DOORS ARE CLOSED. PROVIDE MANUAL OVERRIDE SWITCH TO LOCK OUT AUTOMATIC OPERATION.

DIFFUSER, REGISTER & GRILLE SCHEDULE

SYMBOL	DESCRIPTION	FRAME	STYLE	MATERIAL	FINISH	MANUF & MODEL	REMARKS
CD-1	CEILING DIFFUSER	LAY-IN	4 WAY THROW	STEEL	WHITE	TITUS TMS	
CD-2	CEILING DIFFUSER	SURFACE MOUNTED	4 WAY THROW	STEEL	WHITE	TITUS TDC	WITH OPPOSED BLADE DAMPER
CD-3	ROUND DIFFUSER	SURFACE MOUNTED	4 WAY THROW	STEEL	WHITE	TITUS TMRA	WITH OPPOSED BLADE DAMPER
RG-1	RETURN GRILLE	LAY-IN	LOUVER	ALUMINUM	WHITE	TITUS 350 R	
RG-2	RETURN/EXHAUST GRILLE	SURFACE	LOUVER	ALUMINUM	WHITE	TITUS 350 ZRL	3/4" SPACE, 0° DEFLECTION
SR-1	SUPPLY REGISTER	DUCT	LOUVER	ALUMINUM	WHITE	TITUS 300 RS	
FSCD	SUPPLY & RETURN	SURFACE	LOUVER	STEEL	WHITE	RUSKIN DFSDR	RADIATION FIRE/SMOKE DAMPER

EVAPORATIVE COOLER SCHEDULE (EC *)

SYMBOL	CFM	ESP IWG	FAN MOTOR HP	FAN MOTOR SPEEDS	FAN MOTOR VOLT/ø	PUMP HP	PUMP VOLT/ø	DISCH (SIDE/DOWN)	CELL DECK	MANUF. & MODEL	WEIGHT (LBS)	REMARKS
1,2,3,4	8,000	.15	1	1	208/3	FRAC.	115/1	DOWN	12"	UNITED METAL PRODUCTS CF2100	1190	PROVIDE W/AUTO DAMPER DIFFUSER, MULTI-POSITION SWITCH, FAN ON-OFF, PUMP ON-OFF

ELECTRIC UNIT HEATER SCHEDULE (UH *) (ADD ALTERNATE)

SYMBOL	CFM	ESP	MOTOR HP	MOTOR VOLT/ø	KW	ELECTRICAL VOLTS	ELECTRICAL AMPS	MFR./MODEL	WEIGHT (LBS)	REMARKS
1,2,3,4	850	.01"	1/15	208/1	7.5	208/3	14.5	REZNOR EGEA-7.5	50	T-STAT MOUNTED AT 5' A.F.F.

LEGEND

SYMBOL	DESCRIPTION
	DUCT THRU ROOF
	CEILING DIFFUSER
	CEILING RETURN
	CEILING EXHAUST
	SUPPLY REGISTER
	NEW DUCTWORK & AIR DEVICES
	DUCT TRANSITION
	45° HEEL CONNECTION
	CONICAL TAP W/ VOLUME DAMPER
	FLEX CONNECTION
	COMBINATION FIRE/SMOKE DAMPER
CD	CONDENSATE DRAIN PIPING
T	SPACE TERMPERATURE SENSOR/THERMOSTAT
	IONIZATION/SMOKE DETECTOR
	PIPE UP
	PIPE DOWN
	DUCT W/MANUAL VOLUME DAMPER

(IBC Chapter 10)

Maximum floor area allowances per occupant (Table 1004.1.2)

Occupancy	Room #	Occupancy Group	Square Footage	Floor area per occupant	Occupant Load	Required OSA CFM
Crew	101	B	199	100	2	30
Entry	102	B	228	100	2	34
Prevention Room	103	B	196	100	2	29
Chief	104	R-2	210	50	4	63
Day Room & Kitchen	106	B	555	200	3	42
Classroom	108	B	366	20	18	274
Bio-Hazard	109	B	94	100	1	14
Dorm	110	R-2	92	50	2	28
Dorm	113	R-2	94	50	2	28
Dorm	114	R-2	95	50	2	28
Dorm	115	R-2	96	50	2	29
Mechanical/Janitor	117	B	71	300	0	4
Communication	123	B	46	300	0	2
				Total Occupant Load	40	605

EQUIPMENT	SUPPLY CFM	OSA CFM	OSA PERCENT
AC-1	1600	300	18.8%
AC-2	1600	300	18.8%
AC-3	1600	300	18.8%
TOTAL BUILDING OSA		900	

Arizona Army National Guard
Silverbell Fire Station 361
For
AZ Department of Emergency and Military Affairs

MECHANICAL SCHEDULES

Revisions:

Drawn by:	LJO
Checked by:	JM
Scale:	As Shown
Date:	07/14/06

Registered Professional Engineer (Mechanical) CERTIFICATE NO. 26005 THOMAS G. BARR Date Signed 2/16/06 ARIZONA, U.S.A.

JOB # 06-002

SHEET M-4.1

Sullivan Designs, Inc.
Mechanical / Electrical Consulting Engineers
7878 North 16th Street Suite 270
Phoenix, Arizona 85020
Voice 602.943.8424 Fax 602.943.7931
26016

N:\JOBS\06\06-016\M-4.1.dwg

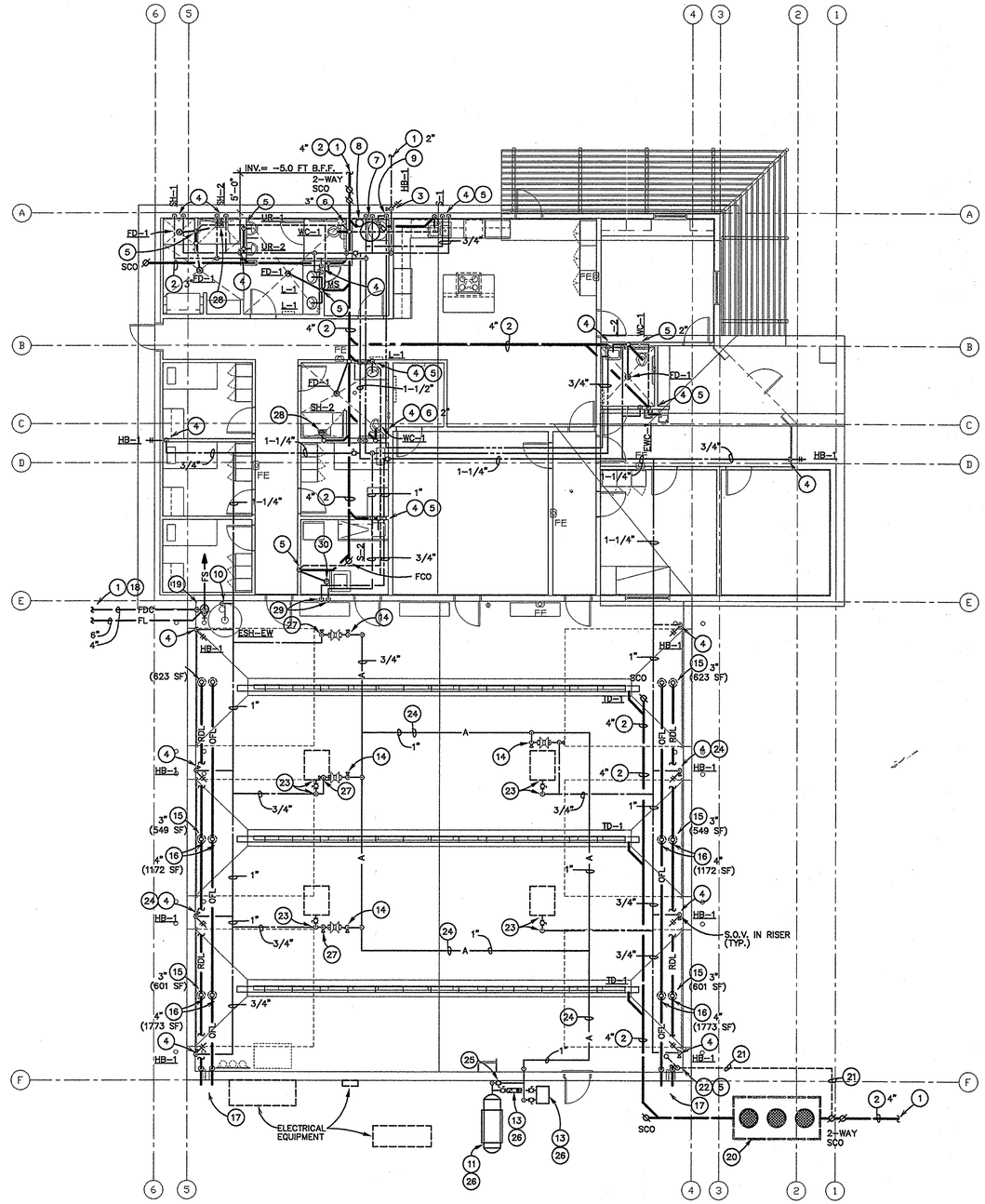

PLUMBING FLOOR PLAN

SCALE: 1/8" = 1'-0"

KEY NOTES

1. PLUMBING CONTRACTOR SHALL EXTEND ALL BUILDING UTILITIES AND CONNECT TO BUILDING UTILITIES INDICATED ON CIVIL ENGINEERING PLANS IF CONSTRUCTED. IF NOT CONSTRUCTED CAP AND PLUG. PLUGGED END SHALL BE MARKED WITH 20 GAUGE COPPER WIRE WITH YELLOW INSULATION CONNECTED TO THE END OF THE PIPE AND EXTENDED 6" ABOVE FINISHED GRADE PRIOR TO BACK- FILLING.
2. BUILDING DRAIN LINE BELOW SLAB, SIZE AS NOTED.SLOPE PIPING AT 1/4" PER FT MINUM.
3. DOMESTIC COLD WATER SUPPLY AND BUILDING SHUT-OFF VALVE, SIZE AS NOTED. SLEEVE PIPING IN WALL AND PIPING ABOVE CEILING AS SHOWN.
4. HOT AND/OR COLD WATER DOWN IN WALL OR CHASE TO PLUMBING FIXTURE(S).
5. RISE VENT PIPING ABOVE CEILING.
6. VENT PENETRATION THROUGH ROOF, SIZE AS NOTED.
7. ELECTRIC WATER HEATER. 120 GALLON CAPACITY
8. THERMAL EXPANSION TANK, ANCHOR TO WALL W/STRUT CHANNEL & LARGE PIPE CLAMP.
9. HOT WATER RETURN DROP TO CIRCULATION PUMP.
10. 1-1/4" CW DROP TO EMERGENCY SHOWER/EYE WASH. PROVIDE S.O.V. AT CONNECTION.
11. AIR COMPRESSOR "CHAMPION" MODEL No. HHP7-12 TANK MOUNTED, 7.5 HP, 208V, 3# 30 CFM CAPACITY AT 100 PSI, 120 GAL RECEVER, PROVIDE W/DRAIN TRAP.
12. AIR COOLED AFTER COOLER: GRAINGER'S STOCK No. 52758, 1/12 HP FAN, 120V.
13. REFRIGERATED AIR DRYER: HANKINSON MODEL NO. 8035 RATED FOR 35 CFM, 1/3 HP 120V. PROVIDE ANGLE IRON STAND. PAINT STAND W/RUST INHIBITING PAINT.
14. 3/4" AIR DROP & CONNECT TO REEL PROVIDED UNDER ANOTHER SECTION, PROVIDE SHUT-OFF VALVE & DRIP LEG W/DRIAN VALVE AT CONNECTION.
15. ROOF AND OVERFLOW DRAIN ABOVE, SIZE AND AREA AS NOTED. SLOPE DRAIN LINES TOWARD WALL AT 1/2" PER FOOT MINIMUM.
16. RAIN/OVERFLOW LEADERS SUPPORTED FROM ROOF STRUCTURE, TRIBUTARY AREA AND PIPE SIZE AS NOTED.
17. EXTEND ROOF & OVERFLOW DRAINS BELOW TOP OF SIDEWALK, TURN 90° & TERMINATE WITHIN SIDEWALK SCUPPER.
18. 6" FIRE LINE AND 4" FIRE DEPT. CONNECTION PIPING. BURY A MINIMUM 30" BELOW FINISHED GRADE, REFER TO SPECS FOR MATERIAL.
19. FIRE SPRINKLER RISER W/CONTROL VALVE ALARM CHECK VALVE, TRIM PIPING, FLOW & TAMPER SWITCHES.
20. 1050 GALLON, PRE-CAST SAND & OIL INTERCEPTOR, BUILD (3) ACESS MANWAYS UP TO SURFACE & PROVIDE WITH HEAVY DUTY TRAFFIC RINGS AND GAS TIGHT MANHOLE COVERS.
21. 3" INTERCEPTOR RELIEF VENT BELOW GRADE, SLOPE TO DRAIN.
22. RISE 3" INTERCEPTOR RELIEF VENT IN BUILDING AS SHOWN WITH FULL SIZE CLEANOUT AT BASE OF RISER AND VENT THROUGH ROOF.
23. 1/2" COLD WATER UP THROUGH ROOF WITH SHUTOFF VALVE. TO EVAP COOLER ABOVE.
24. COMPRESSED AIR PIPING SUPPORTED FROM ROOF STRUCTURE. INSTALL USING COPPER PIPE SAME AS SPECIFIED FOR COLD WATER.
25. PROVIDE NORMALLY CLOSED BY-PASS VALVE FOR COMPRESSED AIR TREATMENT EQUIP.
26. PROVIDE CONCRETE PAD FOR EACH PIECE OF COMPRESSED AIR EQUIPMENT.
27. 3/4" COLD WATER DROP & CONNECT TO HOSE REEL PROVIDED UNDER ANOTHER SECTION, PROVIDE S.O.V. AT CONNECTION.
28. FLOOR DRAIN (FD-1) IN FLOOR DEPRESTION, REFER TO DETAILS ON P-3.1 & ARCH. DRAWINGS.
29. 3/4" H&CW DROP TO WASHER/EXTRACTOR TURN OUT OF WALL & PROVIDE P.D.I. SIZE A WATER HAMMER ARRESTER & S.O.V. FOR EACH CONN. TO WASHER. PROVIDE UNION AT EACH CONNECTION. REFER TO MANUFACTURER'S INSTALLATION INSTRUCTIONS.
30. PROVIDE 3" SIZE FLOOR DRAIN (FD-2) IN BOTTOM OF DRAIN PIT, PROVIDE INDIRECT WASTE PIPING NEEDED FOR A COMPLETE INSTALLATION OF WASHER/EXTRACTOR FURNISHED UNDER ANOTHER SECTION. COORDINATE EFFORTS REQUIRED W/EQUIPMENT SUPPLIER.

HUNT & CARAWAY
Architects, ltd.
7145 North 57th Drive
Glendale, Arizona 85301
Voice (623) 934-4090 Fax (623) 934-4501

Arizona Army National Guard
Silverbell Fire Station 361
For
AZ Department of Emergency and Military Affairs

Revisions:

Drawn by:	LJO
Checked by:	MRT
Scale:	As Shown
Date:	07/14/06

Registered Professional Engineer (Electrical) CERTIFICATE NO. 26005 THOMAS G. BARR Date Signed 7/18/06 ARIZONA, U.S.A.

JOB # 06-002

SHEET P-2.1

Sullivan Designs, Inc.
Mechanical / Electrical Consulting Engineers
7878 North 16th Street Suite 270
Phoenix, Arizona 85020
Voice 602.943.8424 Fax 602.943.7931
26016

THIS DRAWING & THE DATA CONTAINED HEREIN ARE THE PROPERTY OF HUNT & CARAWAY ARCHITECTS, LTD. AND MAY NOT BE USED, REPRODUCED, COPIED, OR TRANSFERRED WITHOUT THE WRITTEN CONSENT OF THE PROPRIETOR AND/OR COMPANY REPRESENTATIVE, NOR SHALL ANY DATA OR INFORMATION CONTAINED HEREIN BE USED IN PART OR IN FULL FOR ANY PURPOSE OTHER THAN THAT DESCRIBED WITHIN THESE DOCUMENTS.

H:\06006\P\6006-P-2.1.dwg

THIS DRAWING & THE DATA CONTAINED HEREIN ARE THE PROPERTY OF HUNT & CARAWAY ARCHITECTS, LTD. AND MAY NOT BE USED, REPRODUCED, COPIED, OR TRANSFERRED WITHOUT THE WRITTEN CONSENT OF THE PROPRIETOR AND/OR COMPANY REPRESENTATIVE. NOR SHALL ANY DATA OR INFORMATION CONTAINED HEREIN BE USED IN PART OR IN FULL FOR ANY PURPOSE OTHER THAN THAT DESCRIBED WITHIN THESE DOCUMENTS.

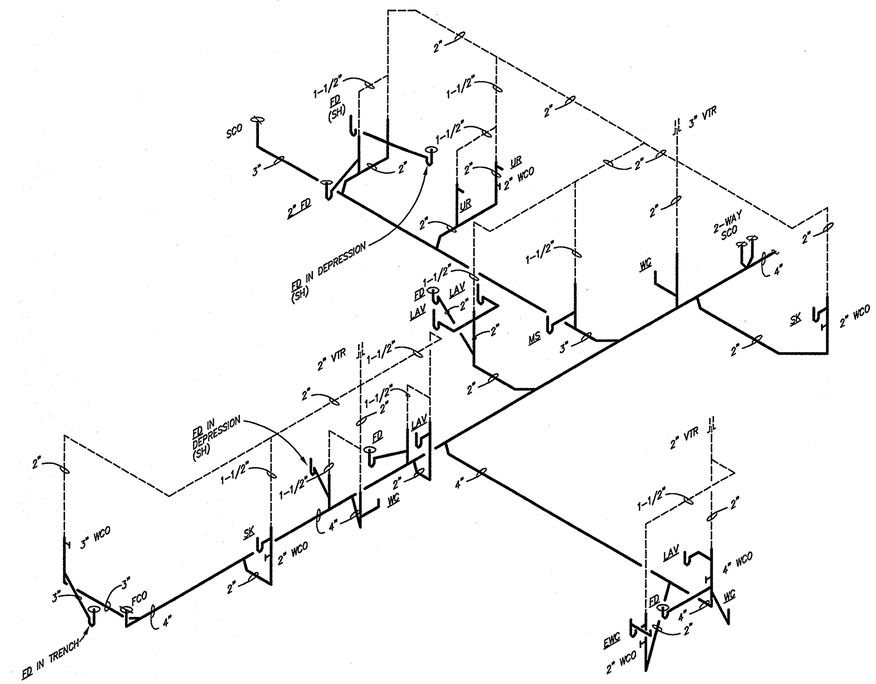

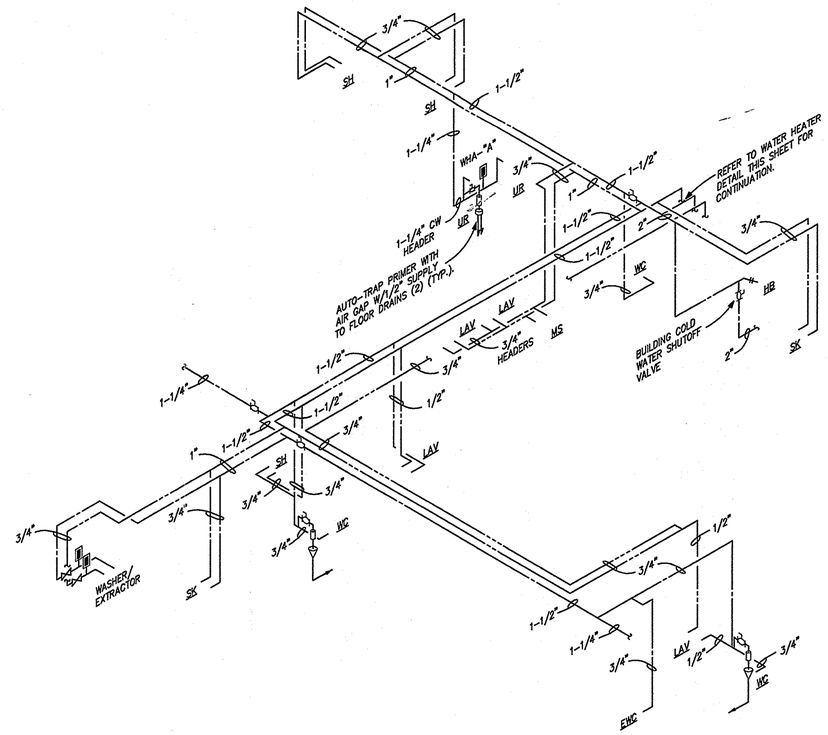

HOT AND COLD WATER PIPING DIAGRAM

NO SCALE

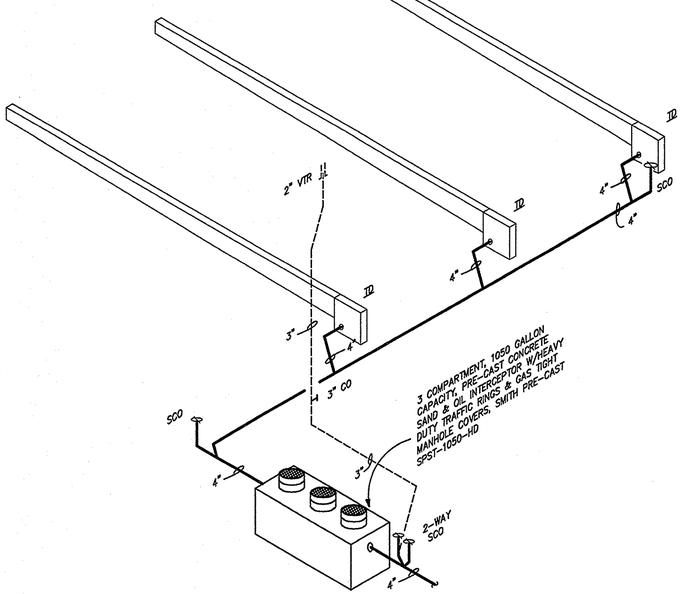

WASTE AND VENT PIPING DIAGRAMS

NO SCALE

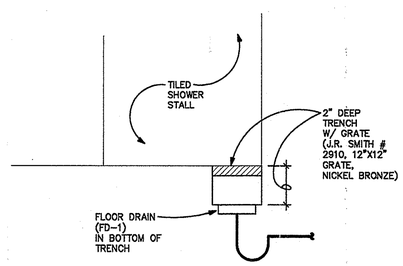

SHOWER DRAIN DETAIL

NO SCALE

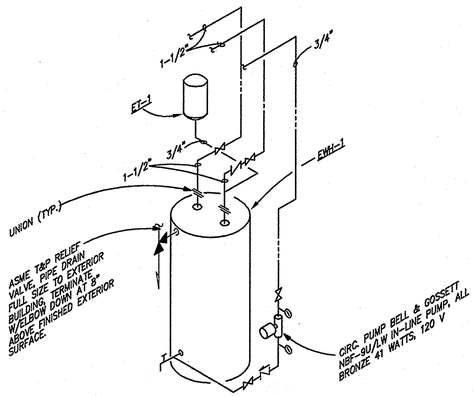

WHD 1

HUNT & CARAWAY
Architects, ltd.
7145 North 57th Drive
Glendale, Arizona 85301
Voice (623) 934-4090 Fax (623) 934-4501

Arizona Army National Guard
Silverbell Fire Station 361
For
AZ Department of Emergency and Military Affairs

Revisions:

Drawn by:	LJO
Checked by:	MRT
Scale:	As Shown
Date:	07/14/06

Registered Professional Engineer (Mechanical)
CERTIFICATE NO. 26005
THOMAS G. BARR
Date Signed 8/18/06
ARIZONA, U.S.A.

JOB # 06-002

SHEET P-3.1

Sullivan Designs, Inc.
Mechanical / Electrical Consulting Engineers
7878 North 16th Street Suite 270
Phoenix, Arizona 85020
26016 Voice 602.943.8424 Fax 602.943.7931

ALL PENETRATIONS OF FIRE-RESISTIVE FLOORS OR SHAFT WALLS SHALL BE PROTECTED BY MATERIALS AND INSTALLATION DETAILS THAT CONFORM TO UNDERWRITERS LABORATORIES LISTINGS FOR "THROUGH-PENETRATION FIRE STOP SYSTEMS." THE CONTRACTOR SHALL SUBMIT SHOP DRAWING DETAILS, FURNISHED BY THE MFR., OF THE FIRE STOP MATERIAL, WHICH SHOW COMPLETE CONFORMANCE TO THE U.L. LISTING TO THE ARCHITECT, AND SUCH DRAWINGS SHALL BE AVAILABLE TO THE CITY INSPECTORS. THE DRAWINGS SHALL BE SPECIFIC FOR EACH PENETRATION, WITH ALL VARIABLES DEFINED.

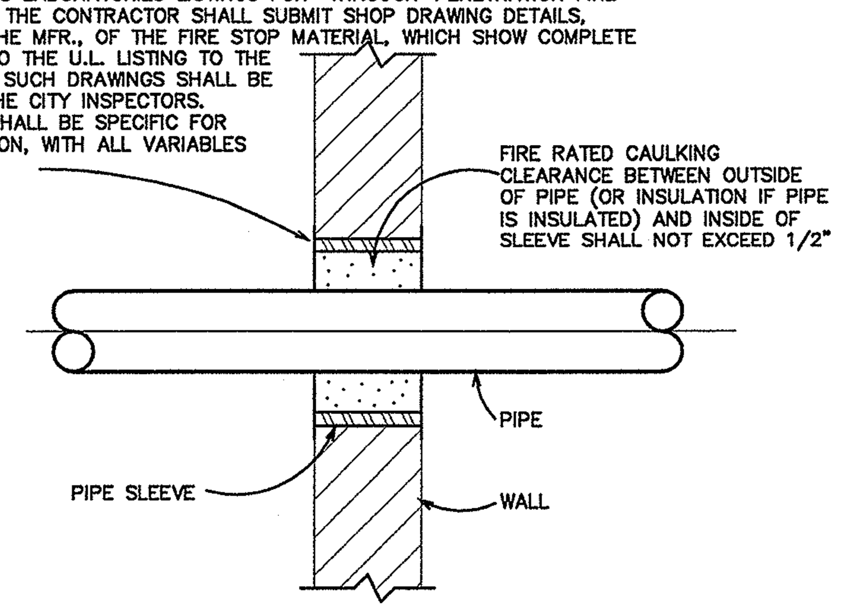

PIPE PENETRATION DETAIL

N.T.S.

PLUMBING SYMBOLS LEGEND

SYMBOL	ABBREVIATION	DESCRIPTION
——— (heavy)	S OR W	SOIL/WASTE
———	V	VENT
———	CW	COLD WATER
———	HW	HOT WATER
———	HWR	HOT WATER RETURN
HB	HB	HOSE BIBB
⊜	FD	FLOOR DRAIN
—⋈—	SOV	SHUT-OFF VALVE
—N—	C.V.	CHECK VALVE
—◈—	BV	BALANCING VALVE (HOT WATER CIRC. SYS.)

CLEANOUT SCHEDULE

MARK	DESCRIPTION	MANUFACTURER AND MODEL NUMBER	FITTING	ACCESSORIES/ REMARKS	PIPE SIZE
WCO	WALL CLEANOUT	MIFAB C1430-RD	-	THREADED BRONZE CLEANOUT PLUG WITH STAINLESS STEEL ACCESS COVER.	2" 3" 4"
SCO	SURFACE CLEANOUT	MIFAB C1104-XR-1-6 HEAVY DUTY ROUND TOP	-	LACQUERED CAST IRON BODY W/5" DIAM., ADJUSTABLE NICKLE BRONZE COMBINED COVER/PLUG, NEOPRENE PRIMARY GASKET SEAL & "O" RING SECONDARY SEAL. WITH SECURITY SCREWS.	4"

ELECTRIC WATER HEATER SCHEDULE

MARK	LOCATION	TANK VOLUME	ELECTRICAL CHARACTERISTICS		MANUFACTURER/MODEL/REMARKS
			KILOWATTS	VOLT/PHASE	
EWH-1	JANITOR RM.	120 GAL.	30	208/3	A.O. SMITH MODEL DVE-120.30, (615 KW ELEMENTS) THERMOSTATS STEPPED ELEMENTS SURFACE THERMOSTAT GLASS LINED TANK W/MAGNESIUM ANODE RODS.

THERMAL EXPANSION TANK SCHEDULE

MARK	VOLUME REQUIRED	TANK VOLUME	ACCEPTANCE FACTOR	MANUFACTURER/MODEL/REMARKS
ET-1	1.2	4.5	.73	AMTROL "THERM-X-TROL" MODEL ST-12, ANCHOR TO WALL W/STRUT CHANNEL & LARGE PIPE CLAMP.

PLUMBING FIXTURE SCHEDULE

SYMBOL	FIXTURE	WASTE	VENT	COLD WATER	HOT WATER	REMARKS	MANUFACTURER/MODEL
WC-1	WATER CLOSET	4"	2"	1-1/2"	--	FLOOR MOUNTED, FLUSH TANK, ELONGATED BOWL, 1.6 GALLON PER FLUSH,VALVE. OPEN FRONT SEAT.	AMERICAN STANDARD 2386.012 "CADET 3 RIGHT HEIGHT", VITREOUS CHINA, SIPHON JET FLUSHING ACTION, ANTI-MICROBIAL GLAZE, PROVIDE CHURCH 295C SEAT.
UR-1	URINAL	2"	1-1/2"	1-1/4"	--	WALL HUNG, WASHOUT TYPE, 1.0 GPF MANUALLY OPERATED FLUSHOMETER VALVE.	AMERICAN STANDARD 6501.010 "WASHBROOK" VITREOUS CHINA, WASHOUT TYPE SLOAN "ROYAL" No. 180-1.0 FLUSHOMETER, PROVIDE J.R. SMITH No. 0634 SUPPORT. UR-2 SAME EXCEPT MOUNT PER ADA REQUIREMENTS. REFER TO ARCHITECTURAL FOR MOUNTING HEIGHT.
L-1	"ACCESSIBLE" LAVATORY	2"	1-1/2"	1/2"	1/2"	COUNTER MOUNTED, SELF-RIMMING, ACCESSIBLE, WITH CERAMIC DISK VALVE, LEVER HANDLES W/0.5 GPM VANDAL RESISTANT AERATOR AND POP-UP DRAIN.	AMERICAN STANDARD 0476.028 "AQUALYN", 20"X17", VITREOUS CHINA, AM. STD. 7411.732 FAUCET WITH SPEED CONNECT POP-UP DRAIN, TAILPIECE, SEMI-CAST P-TRAP W/C.O. PLUG, 1/4 TURN ANGLE STOPS, AND PLUMBEREX "PRO-EXTREME" UNDER LAV INSULATION KIT. MOUNT AT ACCESSIBLE FLOOR TO RIM HEIGHT PER ARCHITECTURAL.
L-2	"ACCESSIBLE" LAVATORY	2"	1-1/2"	1/2"	1/2"	'WALL HUNG, ACCESSIBLE, CERAMIC DISK VALVE, SELF-CLOSING FAUCET WITH VANDAL RESISTANT AERATOR AND 0.25 GALLON PER CYCLE, GRID DRAIN.	AMERICAN STANDARD 0355.012 "LUCERNE", 20"X18", VITREOUS CHINA, GRID DRAIN W/TAILPIECE, SEMI-CAST P-TRAP W/C.O. PLUG, 1/4 TURN ANGLE STOPS, AM. STD. 1340.225 SELF-CLOSING FAUCET, PLUMBEREX "PRO-EXTREME" UNDER LAV INSULATION KIT AND MIFAB MC-41 CONCEALED ARM CARRIER SUPPORT. HANG AT ACCESSIBLE FLOOR TO RIM HEIGHT PER ARCHITECTURAL.
SH-1	SHOWER	3"	1-1/2"	1/2"	1/2"	SHOWER STALL BY ARCHITECT, THERMOSTATIC MIXING VALVE WITH LEVER HANDLE, SOLID BRASS, SELF-CLEANING SHOWER HEAD WITH VOLUME CONTROL, BALL JOINT, ARM AND FLANGE.	LEONARD 4501-H01 PRESSURE BALANCED MIXING VALVE
SH-2	"ACCESSIBLE" SHOWER	3"	1-1/2"	1/2"	1/2"	SHOWER STALL BY ARCHITECT, THERMOSTATIC MIXING VALVE WITH LEVER HANDLE, SOLID BRASS, SELF-CLEANING SHOWER HEAD WITH VOLUME CONTROL, 2.5 GPM FLOW CONTROL, BALL JOINT, ARM AND FLANGE, DIVERTER VALVE, HAND HELD SHOWER WITH 59" METAL HOSE, SUPPLY ELBOW, IN-LINE VACUUM BREAKER AND 24" SLIDE BAR	LEONARD 4505-H01 PRESSURE BALANCED MIXING VALVE
EWC-1	"ACCESSIBLE" ELECTRIC WATER COOLER	2"	1-1/2"	1/2"	--	WALL HUNG, STEEL CABINET, STAINLESS STEEL TOP, BRASS BUBBLERS, A.R.I. CERTIFIED, 8.0 GPH CAPACITY (MIN). REFER TO ARCHITECTURAL FOR MOUNTING HEIGHT.	HAWS CORP, MODEL HWUAC08, STEEL VINYL CLAD CABINET, STAINLESS STEEL TOPS, BRASS BUBBLERS, FRONT AND SIDE PUSH BAR OPERATORS, 1/5 H.P. COMPRESSOR, COLOR AS SELECTED BY ARCHITECT
S-1	SINK	2"	1-1/2"	1/2"	1/2"	SELF-RIMMING, 18 GAUGE STAINLESS STEEL, DOUBLE COMPARTMENT SINK WITH CRUMB CUP STRAINER, SINGLE LEVER SWING SPOUT FAUCET WITH CERAMIC DISC VALVE, 2.2 GPM AERATOR, SIDE SPRAY AND DISPOSAL.	JUST DL-1933-A-GR, 19" x 33" x 7-1/2" DP. 3 HOLE PUNCHED WITH AM. STD. 4205.001 FAUCET AND IN-SINK-ERATOR 333/SS STAINLESS STEEL DISPOSAL, 1/2 H.P., 120 VOLT, U.L. LISTED.
S-2	SINK	2"	1-1/2"	1/2"	1/2"	FREE STANDING, NSF APPROVED, 16 GAUGE, TYPE 304 STAINLESS STEEL, SINGLE COMPARTMENT SINK WITH 14" DEEP BOWL, CRUMB CUP STRAINER, INTEGRAL 10" HIGH BACKSPLASH, LEFT HAND DRAIN BOARD, 1-5/8" STAINLESS STEEL ADJUSTABLE BULLET FEET, BACK MOUNTED SWING SPOUT FAUCET WITH LEVER HANDLES.	AMTECKO C-1-3624-24L WITH ENCORE KN34-8012 FAUCET
MS	MOP SINK	2"	1-1/2"	1/2"	1/2"	FLOOR/CORNER MOUNTED, WALL MOUNTED BACK INLET FAUCET W/INTEGRAL STOPS, HOSE END SPOUT W/PAIL HOOK WALL BRACE AND VACUUM BREAKER, STAINLESS STEEL SPLASH PANELS.	FIAT MSB-2424, 24"x24" POLYMER CONSTRUCTION, No. 832-AA HOSE AND BRACKET, No. 889-CC MOP HANGER, No. E-77-AA VINYL RIMGUARDS, MS2424 STAINLESS STEEL SPLASH PANELS AND AM. STD. 8344.112 WALL MOUNT BACK INLET SERVICE FAUCET W/INTEGRAL STOPS.
CWB	CLOTHE WASHER BOX	2"	1-1/2"	3/4"	3/4"	CAST IRON BODY, CAST IRON DOME STRAINER, 2" HIGH WATER DAM, SUMP RECIEVER AND UNDERDECK CLAMP. PROVIDE EXTENSION AS REQUIRED.	MIFAB MODEL R1200-B-U-M-R
FD-1	FLOOR DRAIN	2"	1-1/2"	1/2" T.P.	--	CAST IRON BODY, FLASHING FLANGE, NICKEL BRONZE GRATE, TRAP PRIMER CONNECTION.	MIFAB No. F1102-C6-1-7 W/6" DIAMETER GRATE AND TRAP PRIMER CONNECTION.
FD-2	FLOOR DRAIN	3"	1-1/2"	--	--	CAST IRON BODY W/FLASHING FLANGE, DUCTILE IRON DOME STRAINER	MIFAB MODEL F1103-K50
FS-1	FLOOR SINK	2"	1-1/2"	--	--	CAST IRON BODY, FLASHING FLANGE, 12" SQUARE x 8" DEEP, A.R.E. INTERIOR AND GRATE, DOME STRAINER.	MIFAB No. FS1732-FL, GRATE AS INDICATED ON PLANS.
FS-2	FLOOR SINK	4"	2"	--	--	CAST IRON BODY, FLASHING FLANGE, 12" SQUARE x 10" DEEP, A.R.E. INTERIOR AND GRATE, DOME STRAINER.	MIFAB No. FS1744-FL, GRATE AS INDICATED ON PLANS.
HB-1	HOSE BIBB	--	--	3/4"	--	HOSE FAUCET W/WALL FLANGE, INTEGRAL VACUUM BREAKER & STEM LOCKSHEILD, LOOSE KEY OPERATION.	MIFAB MODEL MHY-9041, ROUGH BRASS FINISH, ANTI-SIPHON.
RD	ROOF DRAIN	--	--	--	--	CAST IRON BODY, CAST IRON DOME STRAINER, SUMP RECIEVER AND UNDERDECK CLAMP. PROVIDE EXTENSION AS REQUIRED.	MIFAB MODEL R1200-B-U-M
RD	OVERFLOW ROOF DRAIN	--	--	--	--	CAST IRON BODY, CAST IRON DOME STRAINER, 2" HIGH WATER DAM, SUMP RECIEVER AND UNDERDECK CLAMP. PROVIDE EXTENSION AS REQUIRED.	MIFAB MODEL R1200-B-U-M-R
TD	TRENCH DRAIN	4"	--	--	--	PRE-SLOPED, POLYPROPYLENE BODY, WITH INTEGRAL TOP FRAME, ANCHOR FLANGE WITH SLOTTED TABS, GRATE LOCKDOWM ASSEMBLY, BODY SUPPORT LEGS, SUPPORT BOARD, END CAP, CATCH BASIN AND EXTRA HEAVY DUTY DUCTILE IRON GRATE.	MIFAB MODEL T1401-PB-DG THRU T1412-PB-DG WITH CB620-DG CATCH BASIN AND NEUTRAL SECTIONS T1403N-PB, T1406N-PB & T1409N-PB.
CP-1	CIRC PUMP	--	--	--	--	ALL BRONZE, LEAD FREE	BELL & GOSSETT NBF-8S/LW, 115 VOLT, SINGLE PHASE
ESH-EW	EMERGENCY SHOWER & EYEWASH	--	--	1-1/4"	--	COMBINATION SHOWER AND EYEFACE WASH WITH 10" DIA. STAINLESS STEEL SHOWER HEAD WITH 20 GPM FLOW CONTROL, PULL ROD ACTIVATED, 11" DIA. STAINLESS STEEL RECEPTOR WITH SOFTFLO ANTI-SURGE EYEWASH HEADS, AND FACE SPRAY RING, BOTH WITH 1.2 GPM FLOW CONTROL AND STAINLESS STEEL DUST COVER, PUSH FLAG AND FOOT TREADLE OPERATED. SCHEDULE 40 HOT DIPPED GALVANIZED STEEL PIPE WITH SAFTEY GREEN STRIPS.	HAWS MODEL 8347-8127FC

DOMESTIC WATER CALCULATIONS

(1) NEW 2" WATER METER AND 3" R.P. BACKFLOW ASSEMBLY W/ 2" DOMESTIC WATER SERVICE AND 3" BLDG. MAIN LINE SUPPLY.

FIRE STATION BUILDING FIXTURE UNIT COUNT = 78 F.U.

88 F.U. = 40 GPM

PRESSURE DATA:

55 PSI AVAILABLE WATER PRESSURE AT SOURCE (ESTIMATED, CONTRACTOR TO FIELD VERIFY)

PRESSURE LOSS

FIXTURE LOSS = 20.00 PSI
STATIC LOSS (7FT. X .43) = 3.00 PSI
RPBP LOSS = 10.00 PSI

TOTAL LOSS = 33.00 PSI

NET AVAILABLE PRESSURE= (55 - 33) =22.00 PSI

EQUIVALENT LENGTH OF PIPE FROM SOURCE TO BLDG. = 550 FT.

SIZE PIPING ON:

22.00 X 100 / 550 = 4.0 PSI PER 100 FT ALLOWABLE LOSS

NOT TO EXCEED 5 FEET PER SECOND VELOCITY.

FIXTURE UNIT VALUES FOR USE IN BRANCH WATER PIPE SIZING

FIXTURE TYPE	CW F.U.	HW F.U.
WATER CLOSET (FLUSH TANK TYPE)	5.0	—
URINAL	5.0	—
LAVATORY	1.5	1.5
SHOWER	3.0	3.0
SINK	3.0	3.0
ELEC. WTR. COOLER (EA BUBBLER)	2.0	—
MOP SINK	3.0	3.0
CLOTHES WASHER BOX	6.0	6.0
HOSE BIBB	5.0	—

PIPE SIZING SCHEDULE

4.00 PSI/100' (5 FPS MAX. VELOCITY)

SIZE	MAX GPM	VEL. F.P.S.	F.T. F.U.	F.V. F.U.
1/2"	2.0	2.80	1.0	-
3/4"	5.5	4.80	6.0	-
1"	10.0	4.60	13.0	-
1-1/4"	17.0	5.00	24.0	-
1-1/2"	27.0	5.00	46.0	10
2"	48.0	5.00	119.0	44

GENERAL NOTES

1. CONTRACTOR SHALL VERIFY EXACT SIZE, LOCATION AND INVERT OF EXISTING CONDITIONS PRIOR TO INSTALLATION OF NEW WORK.
2. VERIFY EXACT LOCATION OF ALL PLUMBING FIXTURES AND / OR PLUMBING CONNECTIONS REQUIRED FROM DIMENSIONS AND OTHER INFORMATION INDICATED ON THE ARCHITECTURAL DRAWINGS.
3. COORDINATE CONNECTIONS OF BUILDING UTILITIES TO SITE UTILITIES W/ SITEWORK CONTRACTOR(S).
4. ALL SHUT-OFF AND BALANCING VALVES INDICATED SHALL BE LOCATED NOT MORE THAN 12" ABOVE CEILINGS OFFSET PIPING AS NEEDED TO INSTALL VALVES AT THIS LOCATION COORDINATE EFFORTS WITH THOSE OF OTHER TRADES IN HIGH BAY AREAS INSTALL VALVES IN ACCESSIBLE LOCATIONS.
5. SANITARY DRAIN SYSTEM VENTS THRU ROOF SHALL BE AT A LOCATION THAT IS A MINIMUM OF 10'-0" HORIZONTALLY AWAY FROM OR 3'-0" ABOVE ANY HVAC SYSTEMS OUTSIDE OUR INTAKES OR OPENINGS INTO THE BUILDING.
6. PROVIDE ACCESS DOORS FOR SERVICE OF ALL CONCEALED ITEMS SUCH AS WATER HAMMER ARRESTERS AND SOLENOID VALVES ASSOCIATED W/SENSOR OPERATED FAUCETS.
7. VERIFY LOCATION AND DEPTH OF ALL EXISTING BUILDING UTILITIES INDICATED ON CIVIL ENGINEERING DRAWINGS PRIOR TO CONSTRUCTION.
8. PLUMBING CONTRACTOR SHALL PROVIDE FITTINGS AND ADAPTERS AS NECESSARY TO CONNECT TO EXISTING BUILDING UTILITIES.

Sullivan Designs, Inc.
Mechanical / Electrical Consulting Engineers
7878 North 16th Street Suite 270
Phoenix, Arizona 85020
Voice 602.943.8424 Fax 602.943.7931
26016

HUNT & CARAWAY
Architects, ltd.
7145 North 57th Drive
Glendale, Arizona 85301
Voice (623) 934-4090 Fax (623) 934-4501

Arizona Army National Guard
Silverbell Fire Station 361
For
AZ Department of Emergency and Military Affairs

Revisions:

Drawn by: BM
Checked by: BM
Scale: As Shown
Date: 07/14/06

Registered Professional Engineer (Mechanical) CERTIFICATE NO. 26005 THOMAS G. BARR Date Signed 8/18/06 ARIZONA, U.S.A.

JOB # 06-002

SHEET P-4.1

THIS DRAWING & THE DATA CONTAINED HEREIN ARE THE PROPERTY OF HUNT & CARAWAY ARCHITECTS, LTD. AND MAY NOT BE USED, REPRODUCED, COPIED, OR TRANSFERRED WITHOUT THE WRITTEN CONSENT OF THE PROPRIETOR AND/OR COMPANY REPRESENTATIVE. NOR SHALL ANY DATA OR INFORMATION CONTAINED HEREIN BE USED IN PART OR IN FULL FOR ANY PURPOSE OTHER THAN THAT DESCRIBED WITHIN THESE DOCUMENTS.
H:\26016\P6016-P-4.1.dwg

THIS DRAWING & THE DATA CONTAINED HEREIN ARE THE PROPERTY OF HUNT & CARAWAY ARCHITECTS, LTD. AND MAY NOT BE USED, REPRODUCED, COPIED, OR TRANSFERRED WITHOUT THE WRITTEN CONSENT OF THE PROPRIETOR AND/OR COMPANY REPRESENTATIVE. NOR SHALL ANY DATA OR INFORMATION CONTAINED HEREIN BE USED IN PART OR IN FULL FOR ANY PURPOSE OTHER THAN THAT PRESCRIBED WITHIN THESE DOCUMENTS.

THIS DRAWING WAS PLOTTED ON 07/14/06 AT 8:16:42AM

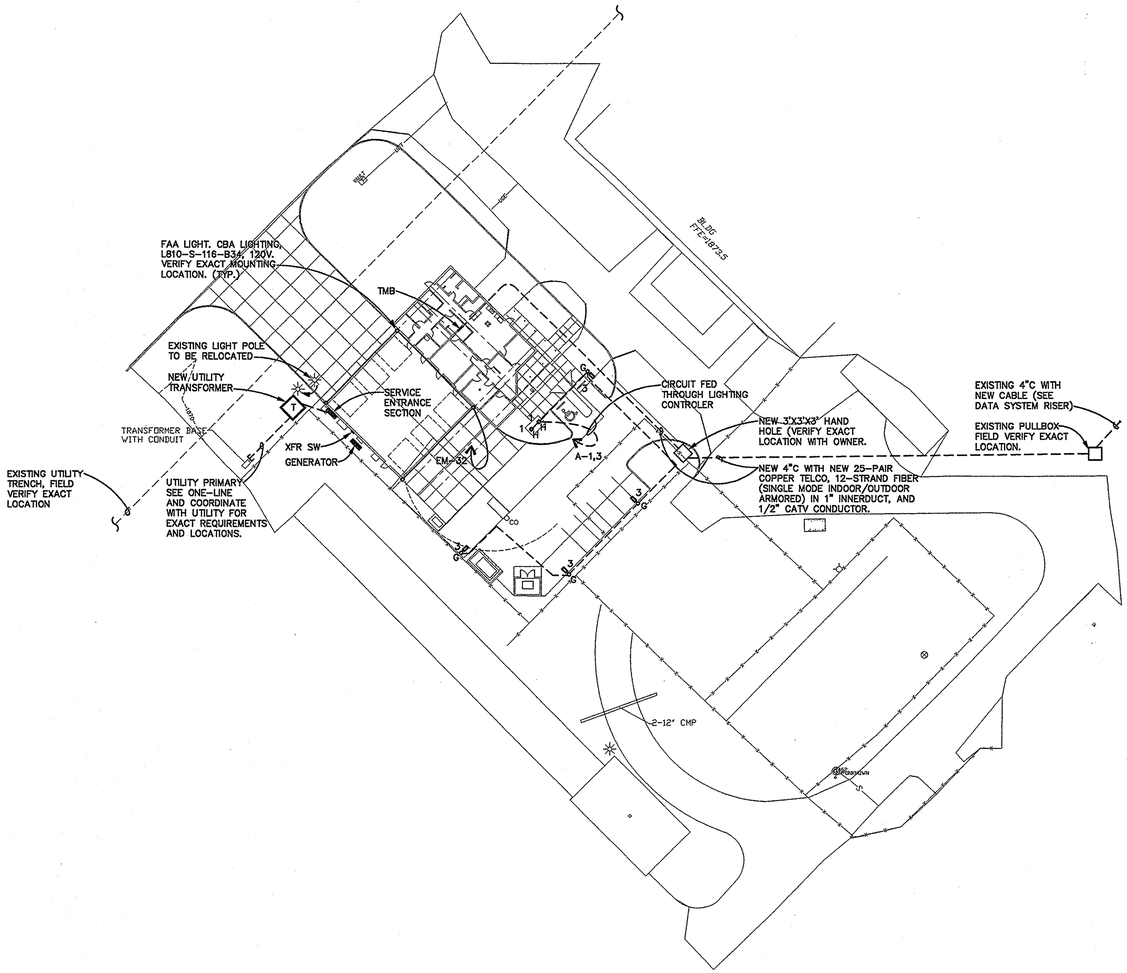

SITE PLAN

SCALE: 1" = 40'-0"

N

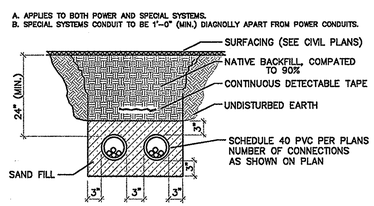

TYPICAL TRENCH SECTION

NOT TO SCALE

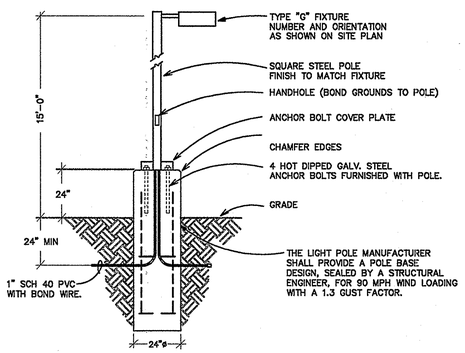

POLE-MOUNTED FIXTURE DETAIL

NOT TO SCALE

ELECTRICAL SYMBOLS

(NOT ALL SYMBOLS MAY BE USED)

GENERAL SYMBOLS

- A — FLUORESCENT LIGHT FIXTURE. CAP LETTER DENOTES FIXTURE DESCRIBED IN FIXTURE SCHEDULE, NUMBER DENOTES CIRCUIT ASSIGNMENT, LOWER CASE LETTER DENOTES SWITCH LEG.
- A — FLUORESCENT FIXTURE WITH (1) BALLAST WIRED TO EMERGENCY POWER, (1) BALLAST WIRED TO NORMAL POWER.
- INCANDESCENT, FLUORESCENT OR 'H.I.D.' LIGHT FIXTURE, CEILING RECESSED OR PENDANT MOUNTED.
- INCANDESCENT, FLUORESCENT OR 'H.I.D.' LIGHT FIXTURE, WALL MOUNTED.
- EMERGENCY EXIT SIGN. SHADED PORTION INDICATES LIGHT FACE. (DIRECTIONAL ARROWS AS INDICATED ON PLAN). SEE FIXTURE SCHEDULE.
- INCANDESCENT, FLUORESCENT, OR 'H.I.D.' LIGHT FIXTURE WIRED ON EMERGENCY SYSTEM.
- $ — 20A., 1P., SINGLE THROW SWITCH. (TRANSCRIPT DENOTES CONTROLLED CIRCUIT LEG). MOUNT AT +42" A.F.F.
- $3 — 3-WAY, 20A., SINGLE THROW SWITCH. MOUNT AT +42" A.F.F. U.N.O.
- $P — 20A., 1P., SINGLE THROW SWITCH, WITH PILOT LIGHT. MOUNT AT 42" A.F.F. U.N.O.
- $K — 20A., 1P., SINGLE THROW SWITCH, KEY OPERATED. MOUNT AT 42" A.F.F. U.N.O.
- $ — MANUAL DIMMER SWITCH. 2000 VA OR AS NOTED. MOUNT AT 42" A.F.F. U.N.O.
- $T — MANUAL MOTOR STARTER WITH SWITCH CONTROL AND THERMAL OVERLOADS. VOLTAGE AND POLES AS REQUIRED.
- WALL MOUNTED DUPLEX RECEPTACLE OUTLET, 20A., 120V., 3-WIRE GROUNDED, NEMA 5-20R. MOUNT AT +18" A.F.F. U.N.O.
- WALL MOUNTED DUPLEX RECEPTACLE OUTLET RATED 20A., 120V., 3-WIRE GROUNDED, NEMA 5-20R WITH TIE STRAP REMOVED FOR "CONSTANT" AND SWITCHED LEG CONTROL WIRING. MOUNT AT +18" A.F.F. U.N.O.
- WALL MOUNTED DUPLEX RECEPTACLE NEMA 20-5R 120V., 3-WIRE GROUNDED, MOUNTED HORIZONTALLY AT +44" ABOVE COUNTER BACKSPLASH, OR AS REQUIRED BY INSTALLATION.
- WALL MOUNTED DOUBLE DUPLEX RECEPTACLE OUTLET WITH (2) 20A., 120V., 3-WIRE, GROUNDED NEMA 5-20R, MOUNTED AT +18" A.F.F. U.N.O., OR AS REQUIRED BY INSTALLATION.
- FLOOR BOX FLUSH MOUNTED IN FLOOR BOX COMPLETE WITH DUPLEX RECEPTACLE (20A., 125V., 3W., GROUNDED) NEMA 5-20R COMPLETE WITH CARPET FLANGE IN CARPETED AREAS. STEEL CITY #864-CST.
- JUNCTION BOX WITH FLEX CONNECTION OR PULL BOX AS REQUIRED.
- HOMERUN TO PANELBOARD OR AS NOTED.
- CONDUIT CONCEALED IN WALL OR ABOVE CEILING.
- CONDUIT ROUTED UNDERGROUND OR UNDER FLOOR SLAB.
- SHORT LINES INDICATE PHASE CONDUCTORS, LONG LINES INDICATE NEUTRAL CONDUCTORS.
- 120/208V PANELBOARD, FLUSH MOUNTED. PROVIDE (2) 3/4" SPARE CONDUITS STUBBED INTO ACCESSIBLE CEILING SPACE.
- 120/208V PANELBOARD, SURFACE MOUNTED.
- 277/480V PANELBOARD, FLUSH MOUNTED. PROVIDE (2) 3/4" SPARE CONDUITS STUBBED INTO ACCESSIBLE CEILING SPACE.
- 277/480V PANELBOARD, SURFACE MOUNTED.
- MOTOR (H.P., VOLTAGE AND PHASE AS NOTED)
- SAFETY DISCONNECT SWITCH WITH FUSES PER MANUFACTURER'S RECOMMENDATIONS. (H.P. OR AMPACITY, VOLTAGE, NUMBER OF POLES AS INDICATED ON PLAN). N.F. INDICATES NON-FUSED.
- COMBINATION STARTER PER MANUFACTURER'S RECOMMENDATIONS OR AS NOTED.
- TC — TIMECLOCK. PCI SWITCHKEEPER (SK-33), WITH 32 RELAYS

ABBREVIATIONS

WP	WEATHERPROOF.
GFI	GROUND FAULT INTERRUPTER.
TTB	TELEPHONE TERMINAL BOARD.
TMC	TELEPHONE MOUNTING CABINET.
SES	SERVICE ENTRANCE SECTION.
EC	EMPTY CONDUIT WITH PULLWIRE.
EDF	ELECTRIC DRINKING FOUNTAIN.
CCTB	CLOSED CIRCUIT TELEVISION.
VP	VANDAL-PROOF.
WG	WIRE GUARD.
SR	SAFETY RECEPTACLE

SPECIAL SYSTEMS SYMBOLS

PUBLIC ADDRESS/INTERCOM SYMBOLS

- S — CEILING SPEAKER.
- V — WALL MOUNTED VOLUME CONTROL. MOUNT AT +48" A.F.F.
- H WP — EXTERIOR INTERCOM HORN, WEATHER PROOF.
- S — FLUSH MOUNTED WALL SPEAKER EXTEND 3/4"E.C. INTO ACCESSIBLE CEILING SPACE
- VOICE/DATA OUTLET, MOUNTED AT +18" A.F.F. U.N.O. PROVIDE 1" CONDUIT STUBBED UP TO ACCESSIBLE CEILING SPACE.
- VOICE AND/OR DATA OUTLET MOUNTED IN FLOORBOX WITH FLUSH TYPE BUSHED COMPLETE WITH CARPET FLANGE IN CARPETED AREAS. STEEL CITY #664-CST.

TELEVISION SYMBOLS

- TV — TELEVISION OUTLET. EXTEND 3/4"E.C. INTO ACCESSIBLE CEILING SPACE

FIRE ALARM SYMBOLS

- F — MANUAL PULL STATION. MOUNT AT +48" A.F.F.
- F WP — EXTERIOR WEATHER-PROOF HORN.
- HORN/STROBE. MOUNT AT +80" A.F.F.
- V — STROBE. MOUNT AT +80" A.F.F.
- S — IONIZATION SMOKE DETECTOR. CEILING MOUNTED.
- D — DUCT DETECTOR. FURNISH AND CONNECTED BY ELECTRICAL. MOUNTED BY MECHANICAL.
- FS — FLOW SWITCH.
- TS — TAMPER SWITCH.
- H — HEAT DETECTOR. CEILING MOUNTED.
- FACP — FIRE ALARM CONTROL PANEL.

HUNT & CARAWAY
Architects, ltd.
7145 North 57th Drive
Glendale, Arizona 85301
Voice (623) 934-4090 Fax (623) 934-4501

Arizona Army National Guard
Silverbell Fire Station 361
For
AZ Department of Emergency and Military Affairs

Revisions:

Drawn by:	LJO
Checked by:	MG
Scale:	As Shown
Date:	07/14/06

Registered Professional Engineer (Electrical) CERTIFICATE NO. 31725 MARK T. GREENAWALT Date Signed 7/14/06 ARIZONA, U.S.A.

JOB # 06-002

SHEET E1.1

Sullivan Designs, Inc.
Mechanical / Electrical Consulting Engineers
7878 North 16th Street Suite 270
Phoenix, Arizona 85020
Voice 602.943.9424 Fax 602.943.7831
26016

LIGHT FIXTURE SCHEDULE

MARK	MANUFACTURER	CATALOG NO.	LAMP NO.	TYPE	VOLTS	MOUNT	DESCRIPTION
A	LIGHTOLIER	PLS209LS2U612050	2	F31UT8/41K	120	CEILING FLUSH	2'x2' FLUORESCENT PARABOLIC TROFFER, FLAT STEEL DOOR, > 68.9% EFFICIENT, STATIC, ELECTRONIC BALLAST
B	LIGHTOLIER	1002P1 1146	1	100W/A19	120	CEILING FLUSH	RECESSED INCANDESCENT DOWNLIGHT WITH SPECULAR CLEAR REFLECTOR
C	LITHONIA	C 232 120 WG	2	F32T8/SPX35	120	CEILING FLUSH	4' FLUORESCENT STRIP WITH WIRE GUARD AND 5'-0" CHAIN HANGER KIT.
D	LIGHTOLIER	SPS1GFSVA240120SO	2	F32T8/SPX35	120	CEILING FLUSH	9"X4' FLUORESCENT LENSED TROFFER, FLAT STEEL DOOR, > 70% EFFICIENT, STATIC, ELECTRONIC BALLAST
E	LIGHTOLIER	LSW120120SO	1	F17T8/SPX41	120	SURFACE WALL	FLUORESCENT WALL MOUNTED VANITY FIXTURE. MOUNTED ABOVE MIRROR
F	LIGHTOLIER	LP 2 F WH	1	LED	120	RECESSED WALL	RECESSED LED FIXTURE MOUNTED ABOVE DOOR
G	WIDELITE	EALS-250-2H-120-PTRD-DB	1	LU250	120	POLE	HIGH PRESSURE SODIUM FIXTURE, POST TOP MOUNTING, DARK BRONSE, HORIZONTAL LAMP, 19" HOUSING, 20' MTG HT
H	HADCO	I3HSP70H120	1	MXR70MH PAR38/SP	120	GROUND FLUSH	ADJUSTABLE WELL LIGHT WITH SPOT REFLECTOR WITH MIN 15 DEGREE ADJUSTMENT.
K	LIGHTOLIER	1002P1 1078	2	60W/A19	120	CEILING FLUSH	RECESSED INCANDESCENT DOWNLIGHT WITH LEXAN LENS FOR SHOWER APPLICATION
L	HADCO	I4HH50H120	1	MXR50/U/MED	120	GROUND FLUSH	IN GROUND WELL LIGHT FIXTURE FOR WALL WASH.
M	LIGHTOLIER	TCU20W120SO	1	F8/T5/41K	120	UNDER COUNTER	24-1/4" UNDERCOUNTER FLUORESCENT FIXTURE
N	LIGHTOLIER	TCU40W120SO	1	F032/T8/41K	120	UNDER COUNTER	4'-0" UNDERCOUNTER FLUORESCENT TASK LIGHT.
⊗	SILTRON	PXLS1RWW		LED	120	CEILING	LED EXIT FIXTURE WITH RED LETTERS ON WHITE FACE
EM	SILTRON	EM50		W/ FIXTURE	120	SURFACE WALL	HIGH INTENSITY TUNGSTEN LAMPS 6V, 6W EMERGENCY BATTERY PACK

KEY NOTES

1. CONNECT TO NEAREST RECEPTACLE HOT LEG OF CIRCUIT AS INDICATED THIS AREA. (TYP.)
2. SHADED FIXTURE INDICATES UNIT ON UNSWITCHED NIGHT LIGHT CIRCUIT, PROVIDE EMERGENCY BATTERY BALLAST MINIMUM 1100 LUMEN OUTPUT. (TYP.)
3. UNDER-COUNTER FLUORESCENT LIGHT FIXTURE WITH ROCKER SWITCH. VERIFY EXACT MOUNTING REQUIREMENTS AND LOCATION WITH ARCHITECT PRIOR TO ROUGH-IN. (TYP.)
4. OUTLET FOR CEILING FAN/LIGHT KIT. PROVIDE CEILING FAN RATED BOX. (TYP.)
5. REFER TO NOTIFICATION SYSTEM DETAIL ON SHEET E4.1 FOR ADDITIONAL INFORMATION. (TYPICAL)

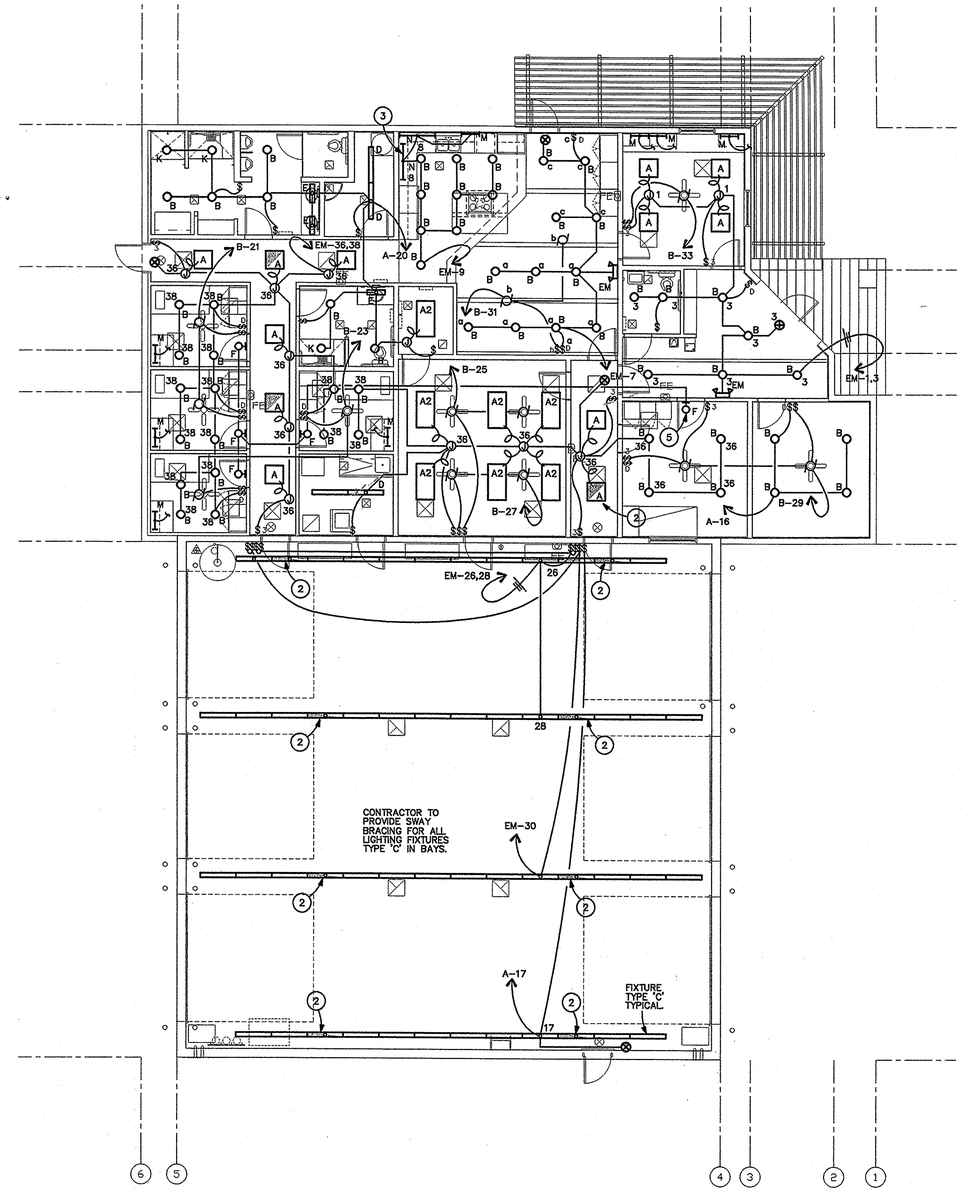

FLOOR PLAN

SCALE: 1/8" = 1'-0"

N

HUNT & CARAWAY Architects, ltd.

7145 North 57th Drive
Glendale, Arizona 85301
Voice (623) 934-4090 Fax (623) 934-4501

Arizona Army National Guard
Silverbell Fire Station 361

For

AZ Department of Emergency and Military Affairs

Revisions:

Drawn by:	sa
Checked by:	sa
Scale:	As Shown
Date:	07/14/06

Registered Professional Engineer (Electrical) CERTIFICATE NO. 31725 MARK T. GREENAWALT Date Signed 8/15/06 ARIZONA, U.S.A.

JOB # 06-002

SHEET E-2.1

Sullivan Designs, Inc.
Mechanical / Electrical Consulting Engineers
7878 North 16th Street Suite 270
Phoenix, Arizona 85020
Voice 602.943.9424 Fax 602.943.7931
26016

THIS DRAWING & THE DATA CONTAINED HEREIN ARE THE PROPERTY OF HUNT & CARAWAY ARCHITECTS, LTD. AND MAY NOT BE USED, REPRODUCED, COPIED, OR TRANSFERRED WITHOUT THE WRITTEN CONSENT OF THE PROPRIETOR AND/OR COMPANY REPRESENTATIVE NOR SHALL ANY DATA OR INFORMATION CONTAINED HEREIN BE USED IN PART OR IN FULL FOR ANY PURPOSE OTHER THAN THAT DESCRIBED WITHIN THESE DOCUMENTS.

H:\06016\E\06-E-2.1.dwg

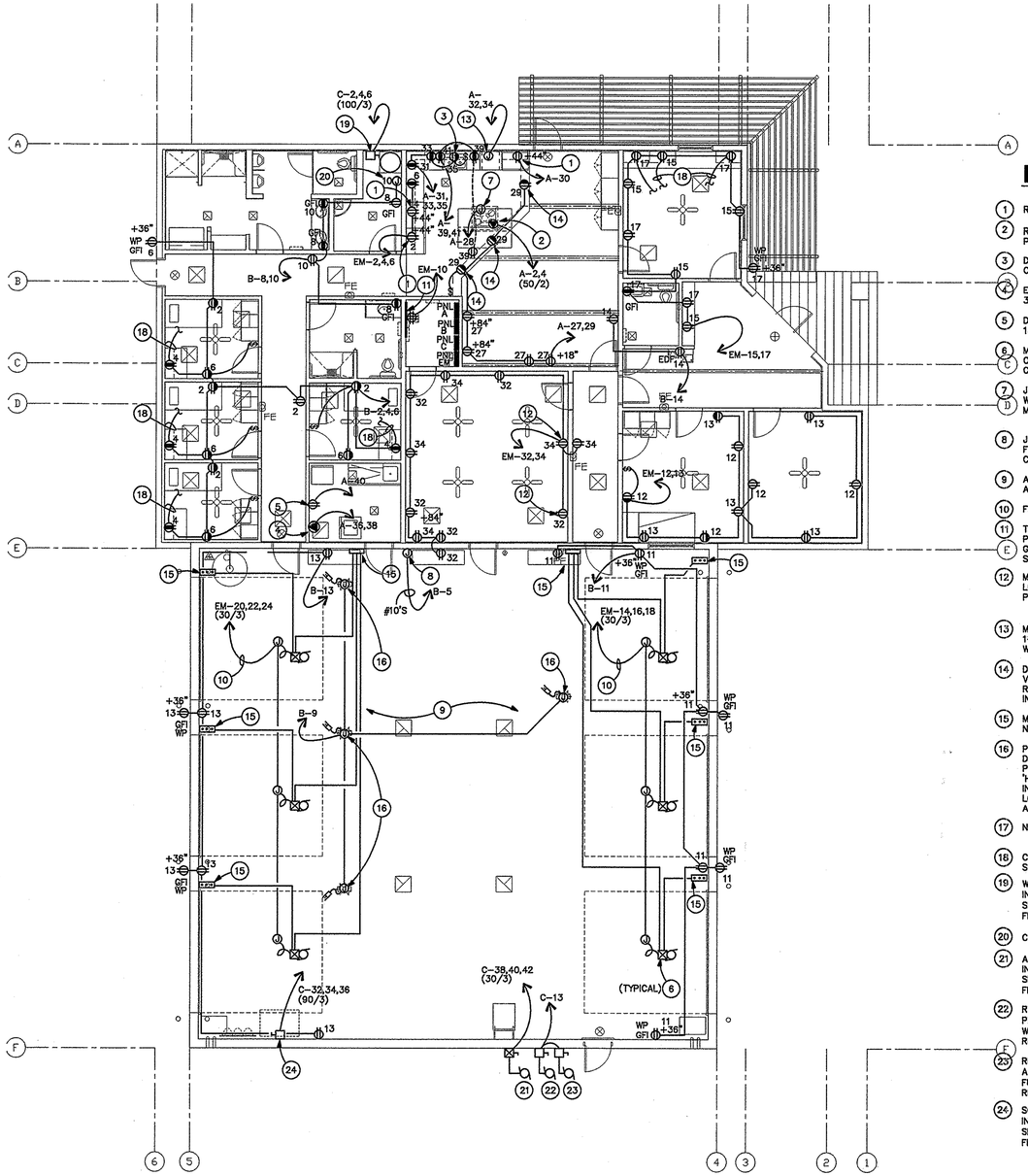

FLOOR PLAN

SCALE: 1/8" = 1'-0"

N

KEY NOTES

1. REFRIGERATOR 7A, 120V.
2. RANGE (240V, 40A). FEED WITH 3#8, 1#10 BOND, 1"C. PROVIDE OUTLET TO MATCH PLUG.
3. DISH/DISPOSAL (1.5KW, 120V) PROVIDE SPLIT WIRED OUTLET.
4. EXTRACTOR (10.0A, 208/1ø) FEED WITH 3#12, 1#12 BOND, 3/4"C OUTLET TO MATCH EQUIPMENT PLUG.
5. DRYER (1/4HP, 120V, 187VA) FEED WITH 2#12, 1#12 BOND, 3/4"C.
6. MOTORIZED DOOR OPERATOR (.75HP, 240/1) DOOR OPERATOR AND CONTROLLER SUPPLIED BY DOOR CONTRACTOR, ELECTRICAL CONTRACTOR INSTALLED.
7. JUNCTION BOX IN CEILING FOR ISLAND EXHAUST HOOD WITH LIGHTS. VERIFY EXACT LOCATION AND REQUIREMENTS WITH SUPPLIER PRIOR TO ROUGH-IN.
8. JUNCTION BOX FOR FUTURE ICE MAKER (21A, 120V) FEED WITH 2#10, 1#10 BOND, 3/4"C. PROVIDE BLANK COVERPLATE.
9. ALL OUTLETS THIS AREA SHALL BE MOUNTED +36" A.F.F. GFI, WP.
10. FEED WITH 3#10, 1#10 BOND, 3/4"C (FULL LENGTH).
11. TELEPHONE MOUNTING BOARD, PLYWOOD WITH #6CU. GROUND. CONNECT TMB GROUND TO BUILDING GROUNDING ELECTRODE SYSTEM PER NEC 800-48.
12. MIRRORED WALL. COORDINATE RECEPTACLES EXACT LOCATION WITH ARCHITECT PRIOR TO ROUGH-IN. PROVIDE EXTENSION RINGS. TYPICAL OF 2.
13. MICRO./OVEN (40A 208/1ø) FEED WITH 3#6, 1#10 BOND, 1-1/4"C, FOUR FOOT FLEXIBLE STEEL CONDUIT INCLUDED WITH PRODUCT.
14. DUPLEX RECEPTACLE MOUNTED IN SOFFITT ABOVE. VERIFY EXACT LOCATION AND MOUNTING REQUIREMENTS WITH ARCHITECT PRIOR TO ROUGH-IN. (TYP OF 3).
15. MOTORIZED DOOR OPERATOR. REFER TO GENERAL NOTE THIS SHEET FOR ADDITIONAL INFORMATION..
16. PROVIDE JUNCTION BOX IN CEILING WITH 25' HEAVY DUTY CORD 'REEL' WITH 120V CIRCUIT AS INDICATED. PROVIDE 12/3 S.O. CORD WITH KELLUM GRIP AND 'HUBBELL' TWIST-LOCK, 20A, 2-POLE, 3-WIRE INSULGRIP LOCKING RECEPTACLE. VERIFY EXACT LOCATION AND MOUNTING REQUIREMENTS WITH ARCHITECT PRIOR TO ROUGH-IN (TYPE OF 6).
17. NOT USED.
18. CONNECT TO UNDERCABINET LIGHT FIXTURE. SEE SHEET E2.1 FOR CONTINUATION. (TYPICAL)
19. WATER HEATER (208V/3PH, 30KW). PROVIDE AND INSTALL100A/3P FUSED DISCONNECT WITH FUSED SIZED PER MANUFACTURER'S RECOMMENDATIONS. FEED WITH 3#1, 1#6 BOND, 1-1/2" C.
20. CIRC PUMP (120V, FRACT HP).
21. AIR COMPRESSOR (208/3, 7.5KW). PROVIDE AND INSTALL 30A, 3P FUSED DISCONNECT WITH FUSES SIZED PER MANUFACTURER'S RECOMMENDATIONS. FEED WITH 3#10, 1#10 BOND, 3/4" C.
22. REFRIGERATED AIR DRYER. (120V, FRACT HP). PROVIDE AND INSTALL 30A/1P FUSED DISCONNECT WITH FUSES SIZED PER MANUFACTURER'S RECOMMENDATIONS.
23. REFRIGERATED AIR DRYER (120V, 1/3 HP). PROVIDE AND INSTALL 30A/1P FUSED DISCONNECT WITH FUSES SIZED PER MANUFACTURER'S RECOMMENDATIONS.
24. SCBA COMPRESSOR (240V/3P, 20HP). PROVIDE AND INSTALL 100A/3P FUSED DISCONNECT W/ FUSES SIZED PER MANUFACTURER'S RECOMMENDATIONS. FEED WITH 3#4, 1#8 BOND, 1-1/4" C.

GENERAL NOTES

1. ALL ELECTRICAL CONDUIT ARE TO HAVE BOND WIRES. (SIZE PER N.E.C.) AS REQUIRED BY CITY, EVEN IF NOT SHOWN ON PLANS.
2. ALL EXTERIOR RECEPTACLES AND DEVICES SHALL BE WEATHERPROOF AND GFCI PER N.E.C.
3. ALL RECEPTACLE IN RESTROOMS, KITCHENS, OR WITHIN 6'-0" OF A SINK SHALL BE GFCI TYPE.

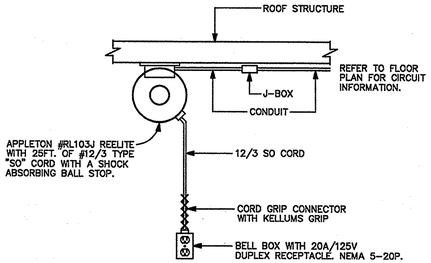

CORD REEL DETAIL

N.T.S.

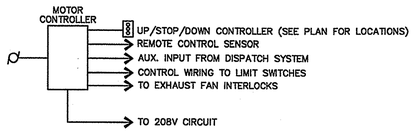

BAY DOOR CONTROL RISER DIAGRAM

THIS CONTRACTOR SHALL PROVIDE A COMPLETE AND OPERATIONAL BAY DOOR SYSTEM INCLUDING ALL DEVICES AND WIRING COMPONENTS BASED ON THE FOLLOWING SCOPE OF WORK:

A. A TOTAL OF TWO MASTER CONTROL STATIONS WILL BE PROVIDED, ONE AT EACH ENTRANCE INTO THE GARAGE WHICH WILL ALLOW FOR CONTROL OF EACH OF THE SIX GARAGE DOORS. CONTROL WILL CONSIST OF UP, DOWN, AND STOP FUNCTIONS.

B. NEAR EACH OF SIX GARAGE DOORS WILL BE AN ADDITIONAL CONTROL WHICH WILL SERVE THAT DOOR ONLY.

C. THERE WILL BE PROVISIONS FOR A REMOTE CONTROL WHICH CAN OPEN EACH OF THE SIX DOORS.

D. IN THE EVENT OF A DISPATCH CALL, ALL THE DOORS SHALL OPEN AUTOMATICALLY.

E. UPON ACTIVATION OF THE DOORS, THE EXHAUST FANS IN THE BAY SHALL BE ENERGIZED FOR A MINIMUM OF 15 MINUTES. THIS TIME MUST BE ADJUSTABLE UP TO 1 HOUR.

HUNT & CARAWAY
Architects, ltd.
7145 North 57th Drive
Glendale, Arizona 85301
Voice (623) 934-4090 Fax (623) 934-4501

Arizona Army National Guard
Silverbell Fire Station 361
For
AZ Department of Emergency and Military Affairs

Revisions:

Drawn by:	sa
Checked by:	sa
Scale:	As Shown
Date:	07/14/06

Registered Professional Engineer (Electrical) 31725 MARK T. GREENAWALT Date Signed 8/18/06 ARIZONA, U.S.A.

JOB # 06-002

SHEET E3.1

Sullivan Designs, Inc.
Mechanical / Electrical Consulting Engineers
7878 North 16th Street Suite 270
Phoenix, Arizona 85020
Voice 602.943.8424 Fax 602.943.7931
26016

THIS DRAWING & THE DATA CONTAINED HEREIN ARE THE PROPERTY OF HUNT & CARAWAY ARCHITECTS, LTD. AND MAY NOT BE USED, REPRODUCED, COPIED, OR TRANSFERRED WITHOUT THE WRITTEN CONSENT OF THE PROPRIETOR AND/OR COMPANY REPRESENTATIVE. NOR SHALL ANY DATA OR INFORMATION CONTAINED HEREIN BE USED IN PART OR IN FULL FOR ANY PURPOSE OTHER THAN THAT DESCRIBED WITHIN THESE DOCUMENTS.

M:\JOB\06\06-E-31.dwg

THIS DRAWING & THE DATA CONTAINED HEREIN ARE THE PROPERTY OF HUNT & CARAWAY ARCHITECTS, LTD. AND MAY NOT BE USED, REPRODUCED, COPIED, OR TRANSFERRED WITHOUT THE WRITTEN CONSENT OF THE PROPRIETOR AND/OR COMPANY REPRESENTATIVE. NOR SHALL ANY DATA OR INFORMATION CONTAINED HEREIN BE USED IN PART OR IN FULL FOR ANY PURPOSE OTHER THAN THAT DESCRIBED WITHIN THESE DOCUMENTS.

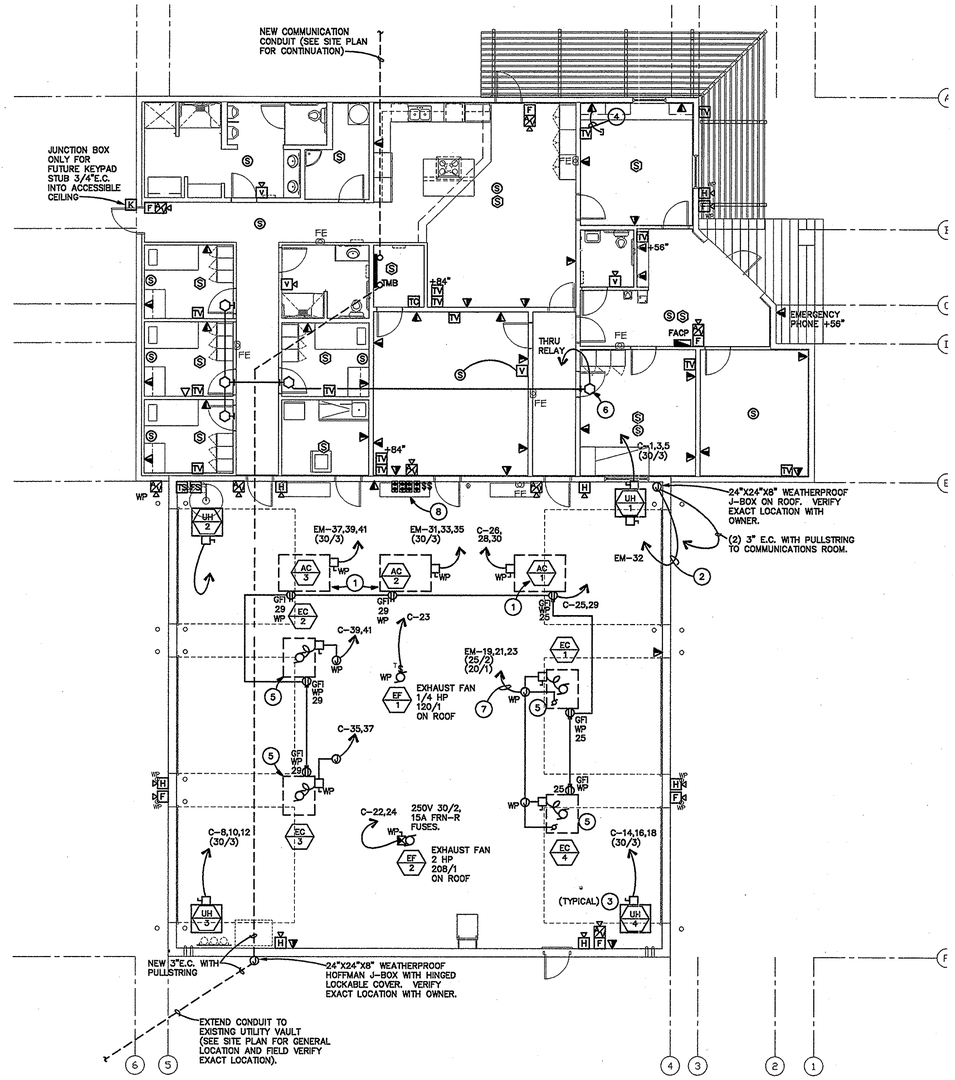

HVAC AND SPECIAL SYSTEMS FLOOR PLAN

SCALE: 1/8" = 1'-0"

N

KEY NOTES

1. ROOFTOP PACKAGED A/C UNIT, (15.1FLA, 208/3) FURNISHED AND INSTALLED 30/3, 20A FRN-RK FUSED SWITCH AT UNIT. FEED WITH 3 #10 1 #10 BOND, 3/4"C.
2. FAA LIGHT MOUNTED ON TOP OF ANTENNA. CBA LIGHTING, L810-S-116-B34, 120V.
3. UNIT HEATER (208V, 3PH, 7.5KW) PROVIDE 30A/3P FUSED DISCONNECT WITH FUSES SIZED PER MANUFACTURER'S RECOMMENDATIONS. FEED WITH 3#10, 1#10 BOND, 3/4" C.
4. PROVIDE SINGLE GANG BOX WITH 3/4" EMPTY CONDUIT WITH PULLWIRE STUBBED-UP INTO NEAREST ACCESSIBLE CEILING SPACE FOR TELEPHONE OR DATA. TERMINATE WITH INSULATED CONDUIT BUSHING +6" ABOVE CEILING. (TYPICAL)
5. EVAPORATIVE COOLER. 1HP, 208V/1PH. 2-SPEED FAN MOTOR. 120V, 1PH FRACTIONAL HP PUMP.
6. BEDROOM HORN/STROBE DEVICE. REFER TO RISER DIAGRAM THIS SHEET FOR ADFITIONAL INFORMATION. (TYP.)
7. FEED WITH 3#10, 1#10 BOND, 3/4" C. (FULL LENGTH)
8. MOUNT CONTROL SWITCHES FOR EXHAUST FANS AND EVAPORATIVE COOLERS AT THIS LOCATION. COOLER SWITCHES PROVIDED BY MECHANICAL CONTRACTOR.

GENERAL NOTES

1. ALL EXTERIOR DEVICES SHALL BE WEATHERPROOF.
2. ALL EXTERIOR RECEPTACLES SHALL BE WEATHERPROOF AND GFCI.

	RACEWAY	TERMINATION	DEVICES	HEADEND EQUIPMENT
PHONE	E	E	E	PUNCH BLOCKS 66'S AND 110'S
DATA	E	E	E	PATCH PANELS
SECURITY	N/A	N/A	N/A	N/A
CATV	E	E	E	AMPLIFIER AND 12 PORT DISTRIBUTION
FIRE ALARM	E	E	E	FULL SYSTEM
INTERCOM	E	E	E	FULL SYSTEM

SPECIAL SYSTEMS MATRIX LETTER 'E' DENOTES ELECTRICAL CONTRACTOR RESPONSIBLE FOR SYSTEM NOTED.

SPECIAL SYSTEMS SCOPE OF WORK

A. THIS CONTRACTOR SHALL PROVIDE AND INSTALL THE FOLLOWING FOR TELEVISION, NETWORK, CABLE TV, AND INTERCOM SYSTEMS:

A COMPLETE AND OPERATIONAL SYSTEM INCLUDING BUT NOT LIMITED TO ALL BACKBOXES, CABLING, BACKBONE, BACK BOARD, HEADEND EQUIPMENT, AND PROGRAMMING.

B. THE CONTRACTOR SHALL TEST AND LABEL ALL CABLES.

C. THE CONTRACTOR SHALL PROVIDE ALL TRENCHING REQUIREMENTS (INCLUDING PVC PIPING) NECESSARY TO PROVIDE THE SERVICES INTENDED IN THIS SCOPE OF WORK, AS WELL AS CUT AND PATCH ALL ASPHALT AREAS.

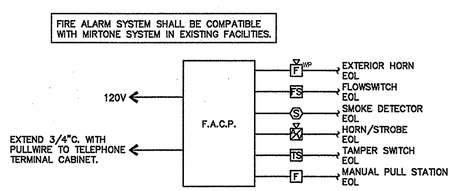

FIRE ALARM RISER DIAGRAM

NTS

NOTE:
ALL CONDUCTORS FOR FIRE ALARM SYSTEM SHALL BE #14 AWG. 105° UL LISTD POWER LIMITED CABLE.

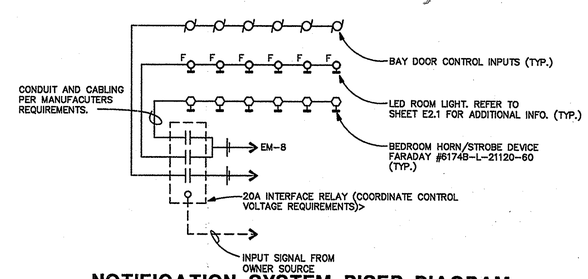

NOTIFICATION SYSTEM RISER DIAGRAM

NOTE:
FIRE ALARM SYSTEM DESIGN WILL BE A DEFERRED SUBMITTIAL AFTER AWARD OF CONTRACT. ACTUAL DESIGN SHALL BE SUBMITTED FOR REVIEW TO FIRE MARSHALL.

HUNT & CARAWAY
Architects, ltd.
7145 North 57th Drive
Glendale, Arizona 85301
Voice (623) 934-4090 Fax (623) 934-4501

Arizona Army National Guard
Silverbell Fire Station 361
For
AZ Department of Emergency and Military Affairs

Revisions:

Drawn by:	sa
Checked by:	sa
Scale:	As Shown
Date:	07/14/06

31725 MARK T. GREENAWALT ARIZONA, U.S.A.

JOB # 06-002

SHEET E4.1

Sullivan Designs, Inc.
Mechanical / Electrical Consulting Engineers
7878 North 16th Street Suite 270
Phoenix, Arizona 85020
Voice 602.943.8424 Fax 602.943.7931
26016

N:\06\06026\06026-E4-1.dwg

Sullivan Designs, Inc. Job # 26016
PANEL A TYPE NQOD DEPTH 5.75 " SURFACE MOUNTED
225 AMP MAIN LUGS 120 /208 VOLTS 3 PH 4 WIRE 10,000 AIC BRKRS
SUBFED :

#	DESCRIPTION	BRKR	A	B	C	BRKR	DESCRIPTION	#
1	LIGHTING	20/1	500			40/2	MISC OVEN	2
	FLAGPOLE/WALL/SIGN		2400					
3	LIGHTING	20/1		1200		-		4
	PARKING LOT			2400				
5	MISC	20/1			660	20/1	LIGHTING	6
	FUEL DISP				900			
7	LIGHTING	20/1	1650			20/1	LIGHTING	8
	BUILDING OUTSIDE		1000				DAY ROOM	
9	LIGHTING	20/1		200		20/1	LIGHTING	10
	TIMECLOCK			1200			PATIO / FANS	
11	SPARE	20/1				20/1	SPARE	12
13	SPARE	20/1				20/1	SPARE	14
15	SPARE	20/1				20/1	LIGHTING PREVENTION	16
17	LIGHTING	20/1			910	20/1	SPARE	18
	BAY							
19	SPARE	20/1				20/1	LIGHTING	20
			455				MENS RSTRMS. /JANITOR	
21	SPARE	20/1				20/1	SPARE	22
23	SPARE	20/1				20/1	SPARE	24
25	SPARE	20/1				20/1	SPARE	26
27	RECEPT	20/1				15/1	MISC	28
	DAY ROOM			969			RANGE HOOD	
29	RECEPT	20/1				20/1	RECEPT	30
	DAY ROOM / SOFFIT				1500		KITCH. REFRIG	
31	RECEPT	20/1	1000			40/2	MISC	32
	KITCHEN / COUNTER		3328				MICRO. / OVEN	
33	RECEPT	20/1		1500				34
	DISHWASHER			3328				
35	RECEPT	20/1			864	20/2	MISC	36
	DISPOSER				1040		WASHING MACHINE	
37	SPARE	20/1						38
			1040					
39	RECEPT	20/1		1000		20/1	MISC	40
	KITCHEN COUNTER			200			DRYER	
41	RECEPT	20/1			1000	20/1	SPARE	42
	KITCHEN COUNTER							
8/18/2006			11373	11997	6874			

Sullivan Designs, Inc. Job # 26016
PANEL B TYPE NQOD DEPTH 5.75 " SURFACE MOUNTED
225 AMP MAIN LUGS 120 /208 VOLTS 3 PH 4 WIRE 10,000 AIC BRKRS
SUBFED :

#	DESCRIPTION	BRKR	A	B	C	BRKR	DESCRIPTION	#
1	SPARE	20/1				20/1	RECEPT	2
			1080				BEDROOMS	
3	SPARE	20/1				20/1	RECEPT	4
				900			BEDROOMS	
5	SPARE	20/1				20/1	RECEPT	6
					1080		BEDROOMS	
7	SPARE	20/1				20/1	RECEPT	8
			540				RESTROOMS / JANITOR	
9	RECEPT	20/1		720		20/1	RECEPT	10
	BAY OVERHEAD			540			RESTROOMS / JANITOR	
11	RECEPT	20/1			1620	20/1	RECEPT	12
	BAY GENERAL / IRR. C				720		EXTERIOR PATIO	
13	RECEPT	20/1	1080			20/1	RECEPT	14
	BAY GENERAL						EDF / TOILET	
15	SPARE	20/1				20/1	SPARE	16
17	SPARE	20/1				20/1	SPARE	18
19	SPARE	20/1				20/1	SPARE	20
21	MISC CIELING FAN	20/1		600		20/1	SPARE	22
23	MISC CIELING FAN	20/1			600	20/1	SPARE	24
25	MISC CIELING FAN	20/1	600			20/1	SPARE	26
27	MISC CIELING FAN	20/1		600		20/1	SPARE	28
29	MISC CIELING FAN	20/1			600	20/1	SPARE	30
31	MISC CIELING FAN	20/1	600			20/1	SPARE	32
33	MISC CIELING FAN	20/1		300		20/1	SPARE	34
35	SPACE	-				-	SPACE	36
37	SPACE	-				-	SPACE	38
39	SPACE	-				-	SPACE	40
41	SPACE	-				-	SPACE	42
8/18/2006			3900	3660	4620			

Sullivan Designs, Inc. Job # 26016
PANEL C TYPE NQOD DEPTH 5.75 " SURFACE MOUNTED
225 AMP MAIN LUGS 120 /208 VOLTS 3 PH 4 WIRE 10,000 AIC BRKRS
SUBFED :

#	DESCRIPTION	BRKR	A	B	C	BRKR	DESCRIPTION	#
1	HEATING UH-1	30/3	2500	2500		100/3	MISC WTR HTR	2
3			10000	10000				4
5		-			2500	-		6
					10000			
7	HEATING UH-1	30/3	2500			30/3	HEATING UH-3	8
			2500					
9		-		2500		-		10
				2500				
11		-			2500	-		12
					2500			
13	SPARE	20/1				30/3	HEATING UH-4	14
			2500					
15	SPARE	20/1				-		16
				2500				
17	SPARE	20/1				-		18
					2500			
19	SPARE	20/1				-	SPACE	20
21	SPARE	20/1				20/2	MECH EF-2	22
				1040				
23	MECH EF-1	20/1			828	-		24
					1040			
25	RECEPT EC-1, EC-4	20/1	540			30/3	MECH AC-1	26
			2520					
27	SPARE	20/1				-		28
				2520				
29	RECEPT EC-2, EC-3	20/1			720	-		30
					2520			
31	SPARE	20/1				90/3	MECH SCBA	32
			6480					
33	SPARE	20/1				-		34
				6480				
35	MECH EC-3	20/2			920	-		36
					6480			
37			920			30/3	MECH AIR	38
			2500				COMPRESSOR	
39	MECH EC-2	30/2		920		-		40
				2500				
41					920	-		42
					2500			
8/18/2006			32960	33460	35928			

Sullivan Designs, Inc. Job # 26016
PANEL EM TYPE LOAD CTR DEPTH 4 " SURFACE MOUNTED
200 AMP MAIN LUGS 120 /208 VOLTS 3 PH 4 WIRE 10,000 AIC BRKRS
SUBFED :

#	DESCRIPTION	BRKR	A	B	C	BRKR	DESCRIPTION	#
1	LIGHTING LOBBY	20/1	1300			20/1	MISC REFRIG.	2
			700					
3	LIGHTING CREW/	20/1		1500		20/1	MISC REFRIG.	4
	CAPTAIN			700				
5	LIGHTING DAYROOM/	20/1			1000	20/1	MISC REFRIG.	6
	HALL				700			
7	LIGHTING DAYROOM/	20/1	1400			20/1	MISC NOTIF.	8
	HALL		500				SYSTEM	
9	MISC FIRE BELL	20/1		100		20/1	RECEPT TTB	10
				360				
11	MISC FACP	20/1			200	20/1	RECEPT CAPTAIN/	12
					900		PREVENTION	
13	RECEPT CAPTAIN/	20/1	900			30/3	MISC BAY DOORS	14
	PREVENTION		2550				EAST	
15	RECEPT LOBBY/CREW	20/1		900		-		16
				2550				
17	RECEPT LOBBY/CREW	20/1			1080	-		18
					2550			
19	MECH EC-1, 4 PUMP	20/1	140			30/3	MISC BAY DOORS	20
			2550				WEST	
21	MECH EC-1, 4	25/2		1840		-		22
				2550				
23		-			1840	-		24
					2550			
25	SPARE	20/1				20/1	LIGHTING BAY	26
			910					
27	SPARE	20/1				20/1	LIGHTING BAY	28
				910				
29	SPARE	20/1				20/1	LIGHTING BAY	30
					910			
31	MECH AC-2	30/3	2532			20/1	RECEPT CLASSROOM	32
			1080					
33		-		2532		20/1	RECEPT CLASSROOM	34
				900				
35		-			2532	20/1	LIGHTING CLASSROOM/	36
					1226		HALLWAYS	
37	MECH AC-3	30/3	2532			20/1	LIGHTING DORMS	38
			1600					
39		-		2532		20/1	SPARE	40
41		-			2532	20/1	SPARE	42
8/18/2006			18694	17374	18020			

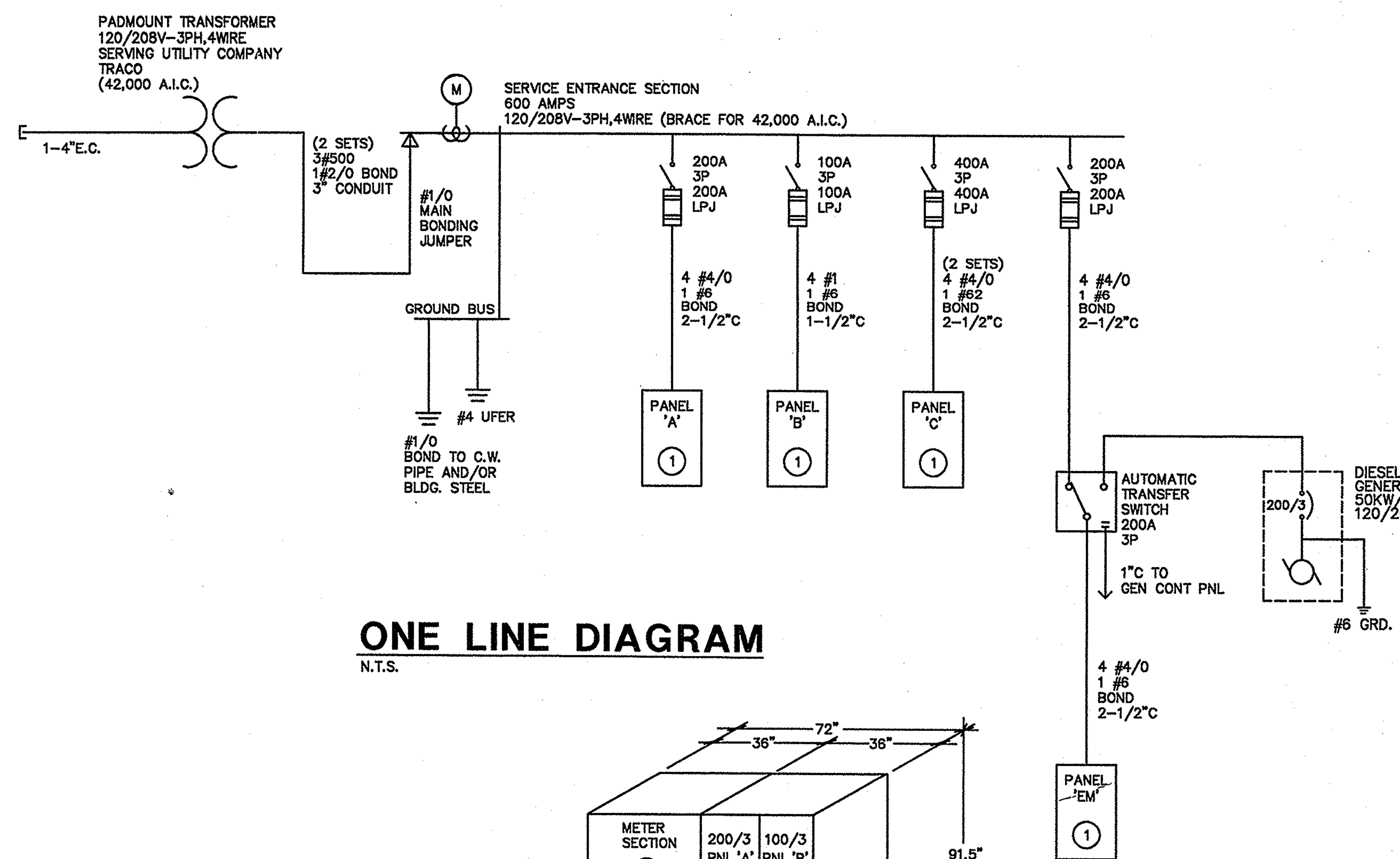

ONE LINE DIAGRAM

N.T.S.

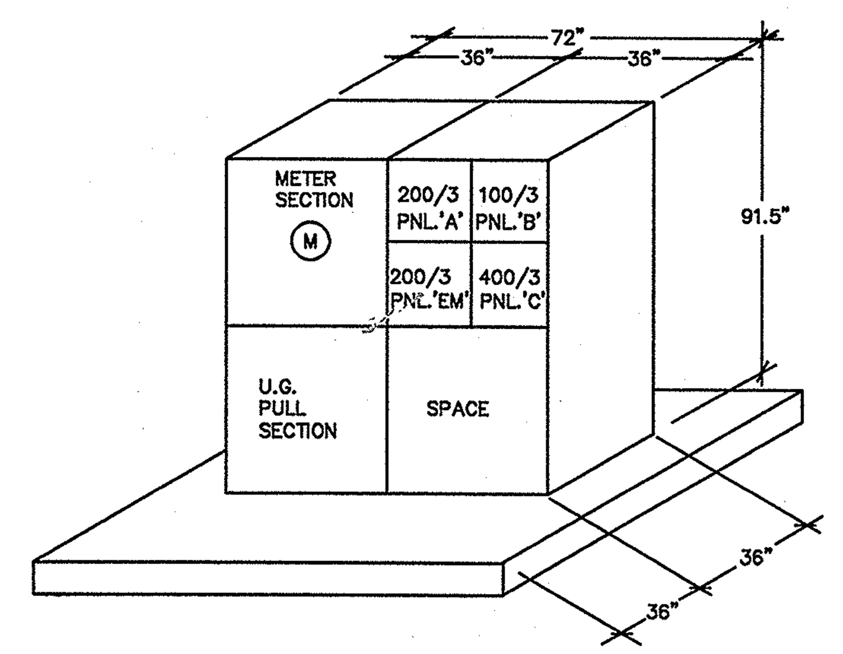

'SES' ELEVATION

N.T.S.

LOAD CALCULATIONS

PANEL EM

TYPE	CONN	DEMAND	CODE
LIGHTING =	10.8 KVA	x 125% =	13.5 KVA
RECEPT =	6.1 KVA	10 KVA @ 100%, rest @ 50% =	6.1 KVA
MECH =	19.0 KVA	125% of largest, rest at 100% =	20.9 KVA
MISC =	18.2 KVA	x 100% =	18.2 KVA
Total =	54.1 KVA	TOTAL =	58.7 KVA
	58.7 KVA @ 208 V 3PH = 162.9 Amps		

PANEL A

TYPE	CONN	DEMAND	CODE
LIGHTING =	8.0 KVA	x 125% =	10.0 KVA
RECEPT =	6.9 KVA	10 KVA @ 100%, rest @ 50% =	6.9 KVA
MISC =	15.4 KVA	x 100% =	15.4 KVA
Total =	30.3 KVA	TOTAL =	32.3 KVA
	32.3 KVA @ 208 V 3PH = 89.5 Amps		

PANEL B

TYPE	CONN	DEMAND	CODE
RECEPT =	8.3 KVA	10 KVA @ 100%, rest @ 50% =	8.3 KVA
MISC =	3.9 KVA	x 100% =	3.9 KVA
Total =	12.2 KVA	TOTAL =	12.2 KVA
	12.2 KVA @ 208 V 3PH = 33.8 Amps		

PANEL C

TYPE	CONN	DEMAND	CODE
RECEPT =	1.3 KVA	10 KVA @ 100%, rest @ 50% =	1.3 KVA
MECH =	41.1 KVA	125% of largest, rest at 100% =	46.0 KVA
MISC =	30.0 KVA	x 100% =	30.0 KVA
HEATING =	30.0 KVA	x 100% =	30.0 KVA
Total =	102.4 KVA	TOTAL =	107.2 KVA
	107.2 KVA @ 208 V 3PH = 297.6 Amps		

PANEL SES
(includes loads from: EM, A, B, C)

TYPE	CONN	DEMAND	CODE
LIGHTING =	18.8 KVA	x 125% =	23.5 KVA
RECEPT =	22.5 KVA	10 KVA @ 100%, rest @ 50% =	16.3 KVA
MECH =	60.1 KVA	125% of largest, rest at 100% =	65.0 KVA
MISC =	67.5 KVA	x 100% =	67.5 KVA
HEATING =	30.0 KVA	x 100% =	30.0 KVA
Total =	198.9 KVA	TOTAL =	202.2 KVA
	202.2 KVA @ 208 V 3PH = 561.1 Amps		

SERIES RATED NOTES

A. SWITCHBOARD COMPONENTS, INCLUDING OVERCURRENT PROTECTIVE DEVICES SHALL BE FULLY RATED FOR THE AVAILABLE FAULT CURRENT SHOWN.

B. PER NEC ARTICLE 110-22, PROVIDE IDENTIFICATION AT ENCLOSURE OF PANELBOARDS WHERE BREAKERS ARE APPLIED IN SERIES COMBINATION, STATING: "CAUTION: SERIES RATED SYSTEM. ________AMPS AVAILABLE. IDENTIFIED REPLACEMENT COMPONENTS REQUIRED." CONTRACTOR TO FILL IN BLANK WITH AVAILABLE FAULT CURRENT AS SHOWN ON ONE-LINE DIAGRAM.

C. PER NEC ARTICLE 110-22, PROVIDE IDENTIFICATION AT EACH DISCONNECTING MEANS FEEDING DOWNSTREAM DEVICES APPLIED IN SERIES COMBINATION, STATING: "CAUTION - SERIES RATED DEVICES ARE FED FROM THIS REMOTE MAIN. ________AMPS AVAILABLE. IDENTIFIED REPLACEMENT COMPONENT REQUIRED." CONTRACTOR TO FILL IN BLANK WITH AVAILABLE FAULT CURRENT AS SHOWN ON ONE-LINE DIAGRAM.

D. A TWO-TIER SERIES RATED SYSTEM IS SPECIFIED, 42/10 FOR 208 V SYSTEMS.

E. MOTOR CONTRIBUTION TO THE FAULT CURRENT MEETS THE 1% CRITERIA

F. NO DESIGN CHANGES MAY MADE TO THE SYSTEM W/O THE PRIOR APPROVAL OF THE DESIGN ELECTRICAL ENGINEER AND THE ELECTRICAL INSPECTOR

G. A.I.C. RATING SHOWN AT PANELBOARDS IS MINIMUM RATING FOR OVERCURRENT PROTECTIVE DEVICES. EACH DEVICE SHALL BE FULLY RATED OR SERIES RATED WITH UPSTREAM DEVICE AT AFC AS SHOWN ON ONE-LINE DIAGRAM.

KEYNOTES

(1) PANEL SHALL BE SERIES RATED.

HUNT & CARAWAY
Architects, ltd.
7145 North 57th Drive
Glendale, Arizona 85301
Voice (623) 934-4090 Fax (623) 934-4501

Arizona Army National Guard
Silverbell Fire Station 361
For
AZ Department of Emergency and
Military Affairs

Revisions:

Drawn by: xx
Checked by: xx
Scale: As Shown
Date: 07/14/06

Registered Professional Engineer (Electrical) No. 31725 MARK T. GREENAWALT Date Signed 8/18/06 ARIZONA, U.S.A.

JOB # 06-002

Sullivan Designs, Inc.
Mechanical / Electrical Consulting Engineers
7878 North 16th Street Suite 270
Phoenix, Arizona 85020
Voice 602.943.8424 Fax 602.943.7931
26016

SHEET
E5.1

THIS DRAWING & THE DATA CONTAINED HEREIN ARE THE PROPERTY OF HUNT & CARAWAY ARCHITECTS, LTD. AND MAY NOT BE USED, REPRODUCED, COPIED, OR TRANSFERRED WITHOUT THE WRITTEN CONSENT OF THE PROPRIETOR AND/OR COMPANY REPRESENTATIVE. NOR SHALL ANY DATA OR INFORMATION CONTAINED HEREIN BE USED IN PART OR IN FULL FOR ANY PURPOSE OTHER THAN THAT DESCRIBED WITHIN THESE DOCUMENTS.
H:\26016\E\6016-E-5-1.dwg